1254

DECORATIVE CASTINGS

FOR STREET LIGHTING, TRAFFIC SIGNALS, & SIGNAGE.

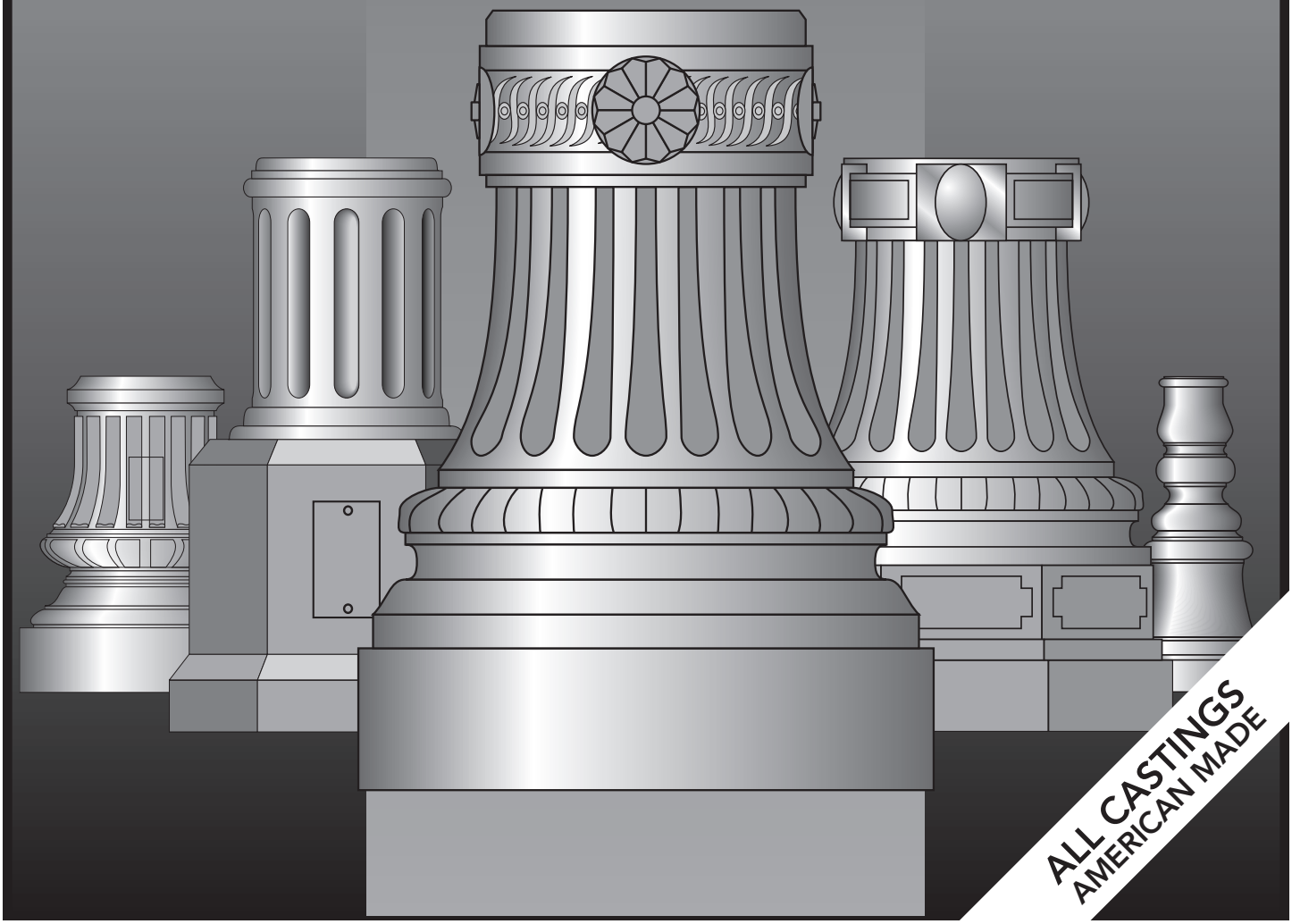

ALL CASTINGS
AMERICAN MADE

1254

SPECIFICATIONS

BASE CONSTRUCTION

The decorative aluminum base is constructed of two identical cast clamshells A319 alloy aluminum or equivalent. Parts are cast whole or in components welded together prior to application of finish. Bases are not structural.

HARDWARE

Connecting hardware are stainless steel socket head style bolts. Tamperproof type hardware is available as a special order. All hardware is accessible from outside the base for easy installation. Clamshell halves are factory fitted and shipped together.

ACCESS DOORS

Each half is identical with an integral door designed to fit the aesthetic appearance of the base. Doors are supplied with stainless steel socket style screws.

FIT TOLERANCES TO POLE

Clamshell bases are designed to wrap around the pole with a circular hole with a tolerance of .25" maximum clear between the pole and the casting. For fluted poles, the flutes will start 1-2" above the top of the base for a clean appearance.

FINISH SPECIFICATIONS

The base finish is TGIC polyester powder coating applied consult with factory for colors.

TOP OPENING DIMENSIONS

The top opening dimensions are calculated using the pole base dimension and a taper rate of .14" per foot. The opening is designed to accommodate outside diameter of pole.

ARM CASTING ASSEMBLIES DESIGNED FOR MAXIMUM FIXTURE WEIGHT 65 LBS

HOW TO ORDER BASES

BASE CAT. #BCCST3439 + **BASE OPENING 20"** + **OPTIONS ADVISE**

Due to continuing improvement, 1245 Industries, LLC reserves the right to change dimensions, designs, and construction from that which is shown in this brochure.

HUNTINGTON OCTAGONAL *SERIES*

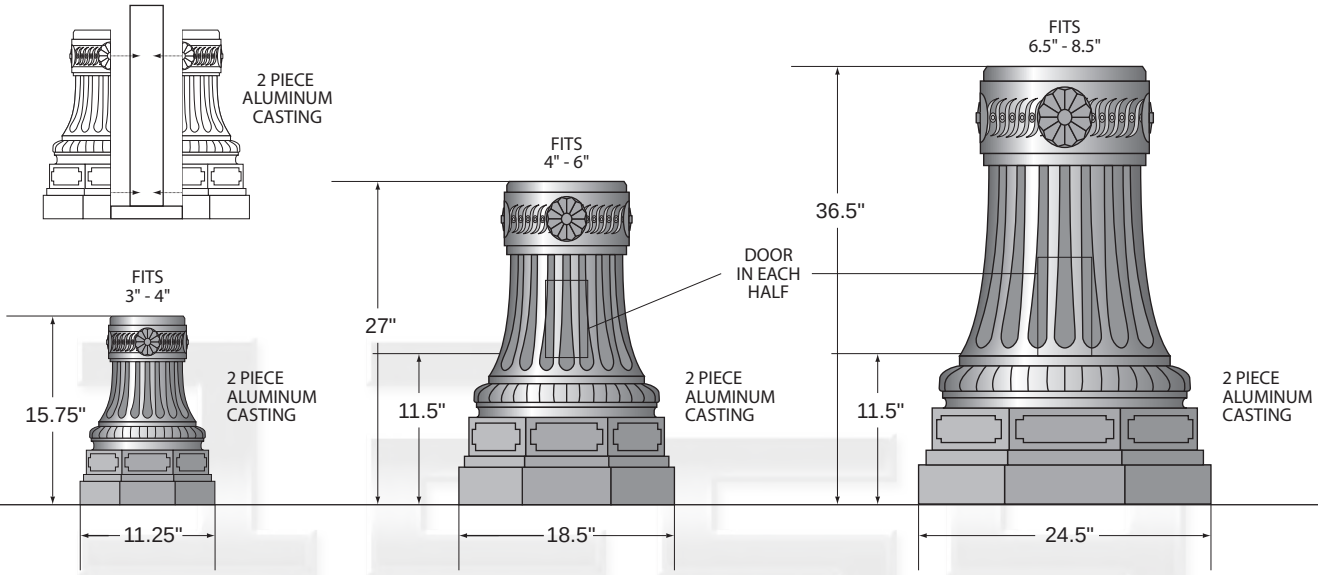

#BCHUO1115 HUNTINGTON OCTAGONAL SERIES

11.25" FL-FL
12" P-P

#BCHUO1827 HUNTINGTON OCTAGONAL SERIES

18.5" FL-FL
19.75" P-P

#BCHUO2436 HUNTINGTON OCTAGONAL SERIES

24.5" FL-FL
25.75" P-P

HUNTINGTON ROUND *SERIES*

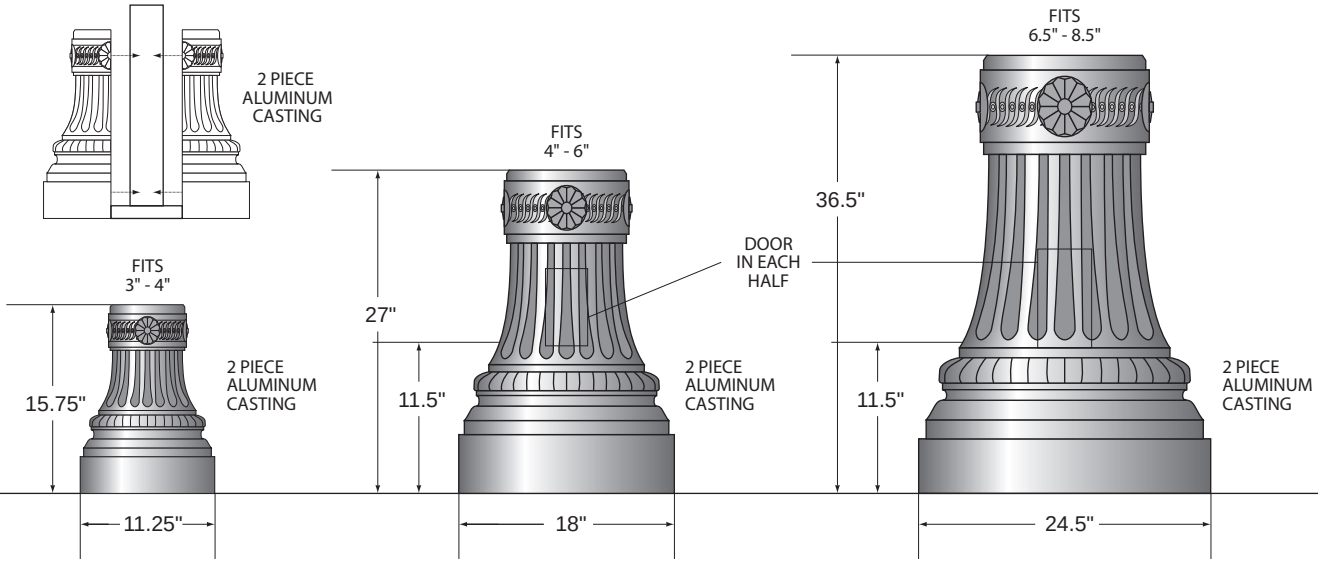

#BCHUN1115 HUNTINGTON ROUND SERIES 11.25"

#BCHUN1827 HUNTINGTON ROUND SERIES 18"

#BCHUN2436 HUNTINGTON ROUND SERIES 24.5"

Due to continuing improvement, 1245 Industries, LLC reserves the right to change dimensions, designs, and construction from that which is shown in this brochure.

1254 Industries, LLC, 1444 Alpine Pl, San Marcos CA 92078 • VOICE 760.798.8531 • FAX 760.798.8535
sales@1254industries.com • WWW.1254INDUSTRIES.COM

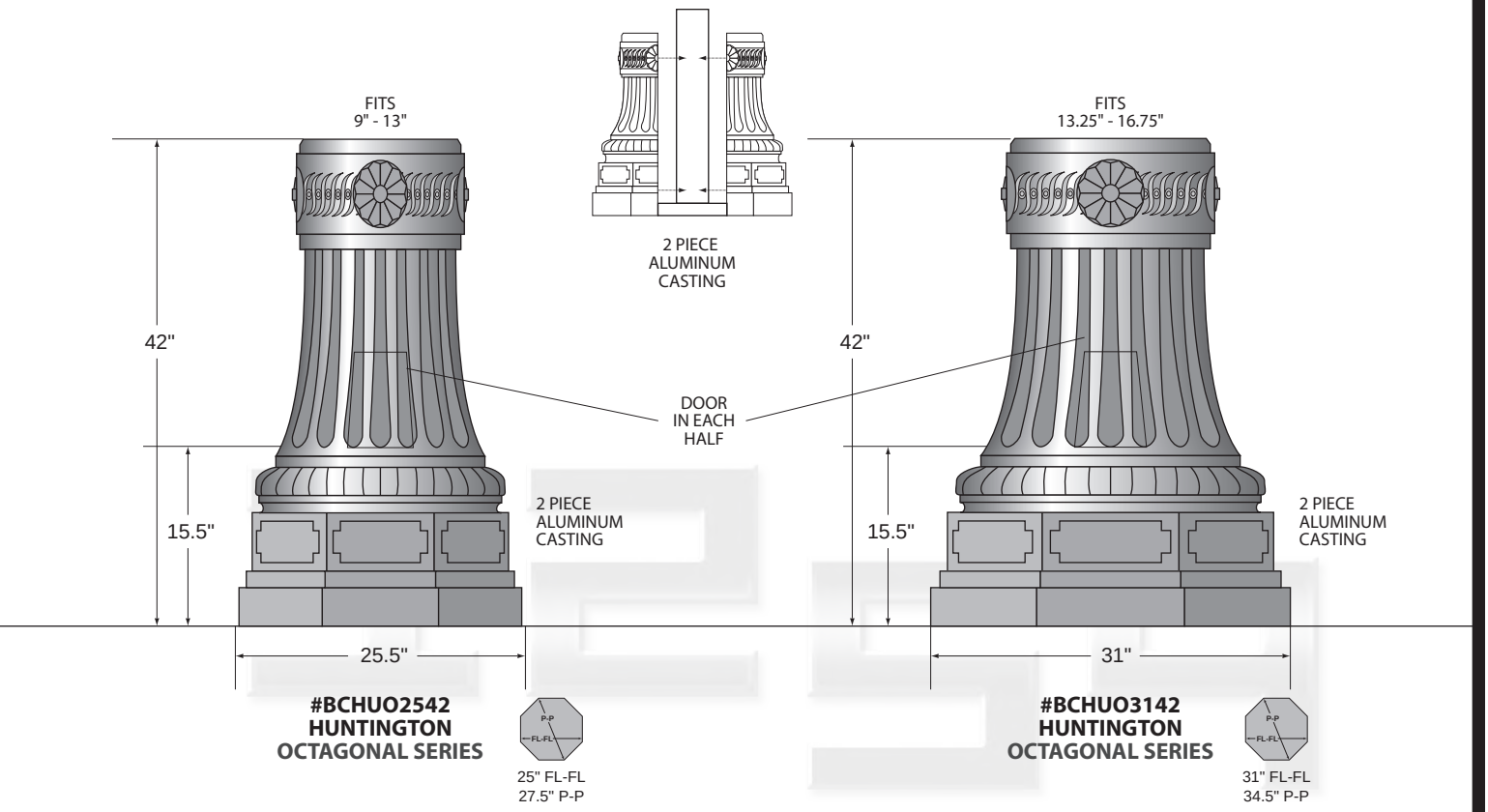

#BCHUO2542
HUNTINGTON
OCTAGONAL SERIES

25" FL-FL
27.5" P-P

#BCHUO3142
HUNTINGTON
OCTAGONAL SERIES

31" FL-FL
34.5" P-P

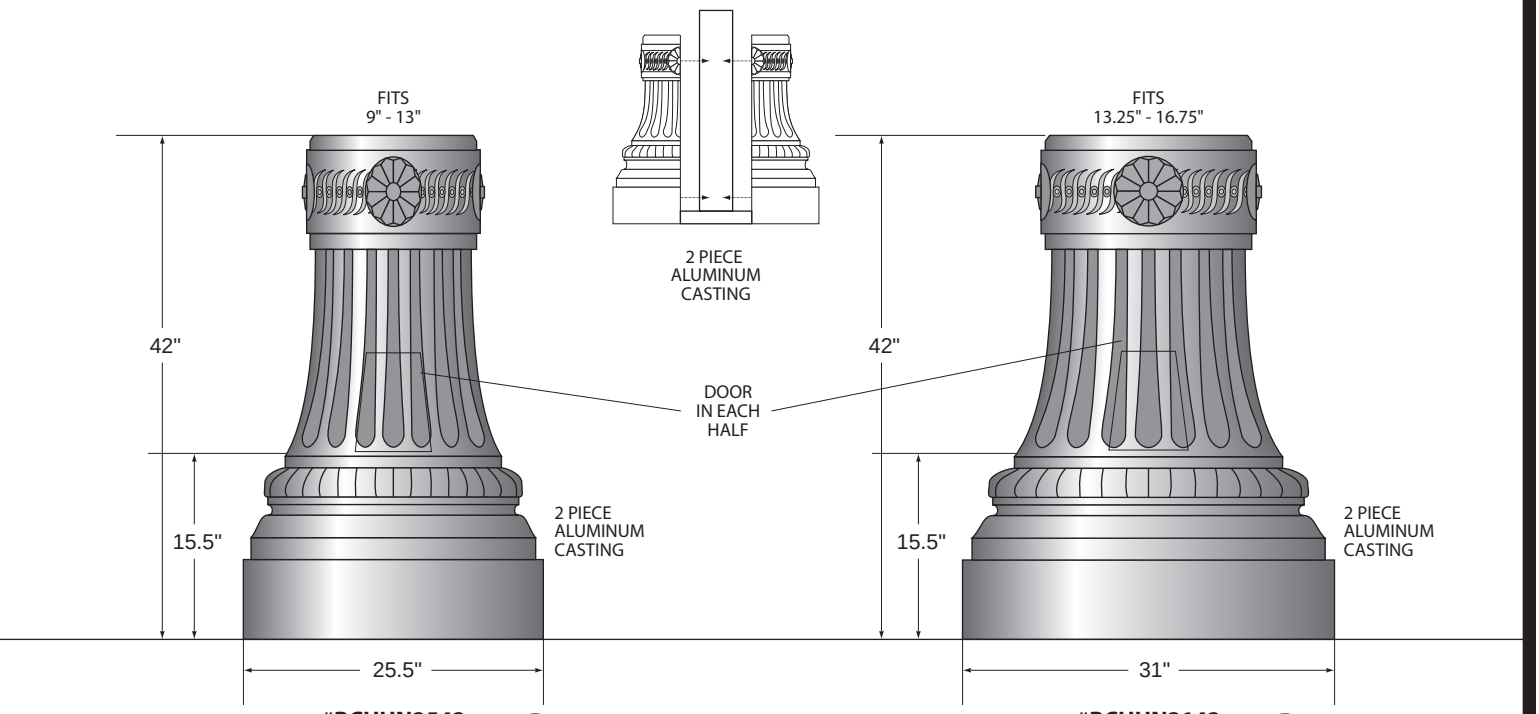

#BCHUN2542
HUNTINGTON
ROUND SERIES

25.5"

#BCHUN3142
HUNTINGTON
ROUND SERIES

31"

Due to continuing improvement, 1245 Industries, LLC reserves the right to change dimensions, designs, and construction from that which is shown in this brochure.

STERLING OCTAGONAL *SERIES*

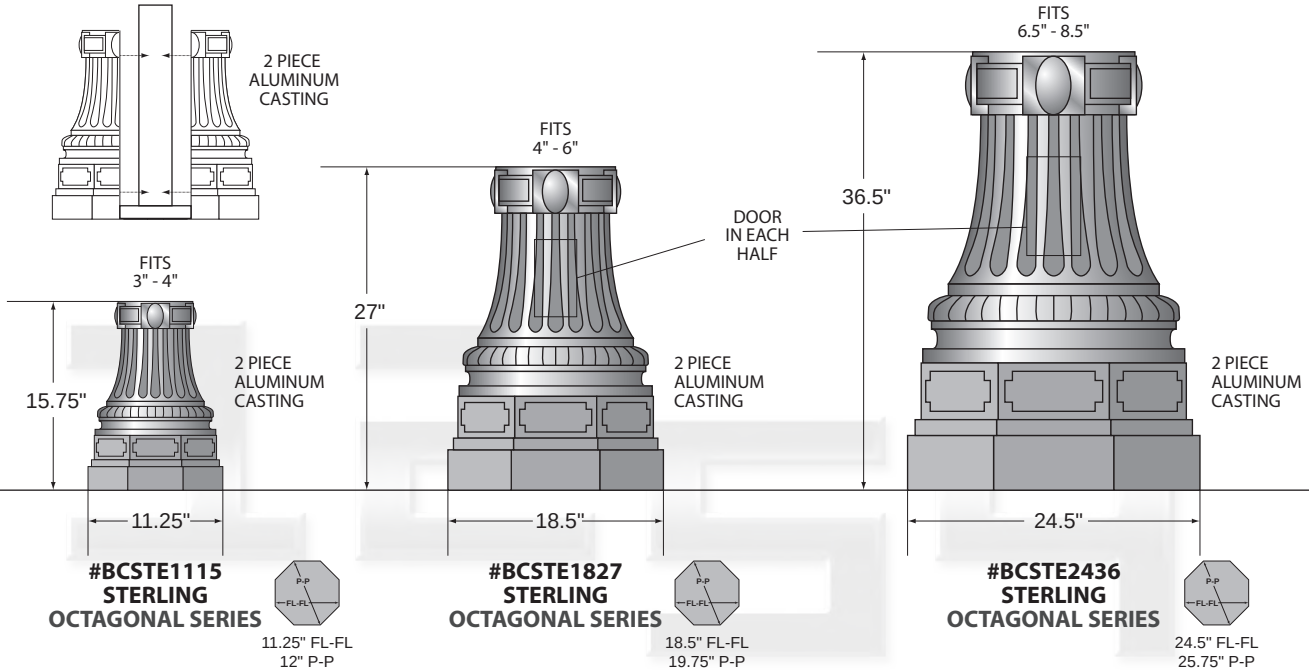

#BCSTE1115 STERLING OCTAGONAL SERIES
11.25" FL-FL
12" P-P

#BCSTE1827 STERLING OCTAGONAL SERIES
18.5" FL-FL
19.75" P-P

#BCSTE2436 STERLING OCTAGONAL SERIES
24.5" FL-FL
25.75" P-P

STERLING ROUND *SERIES*

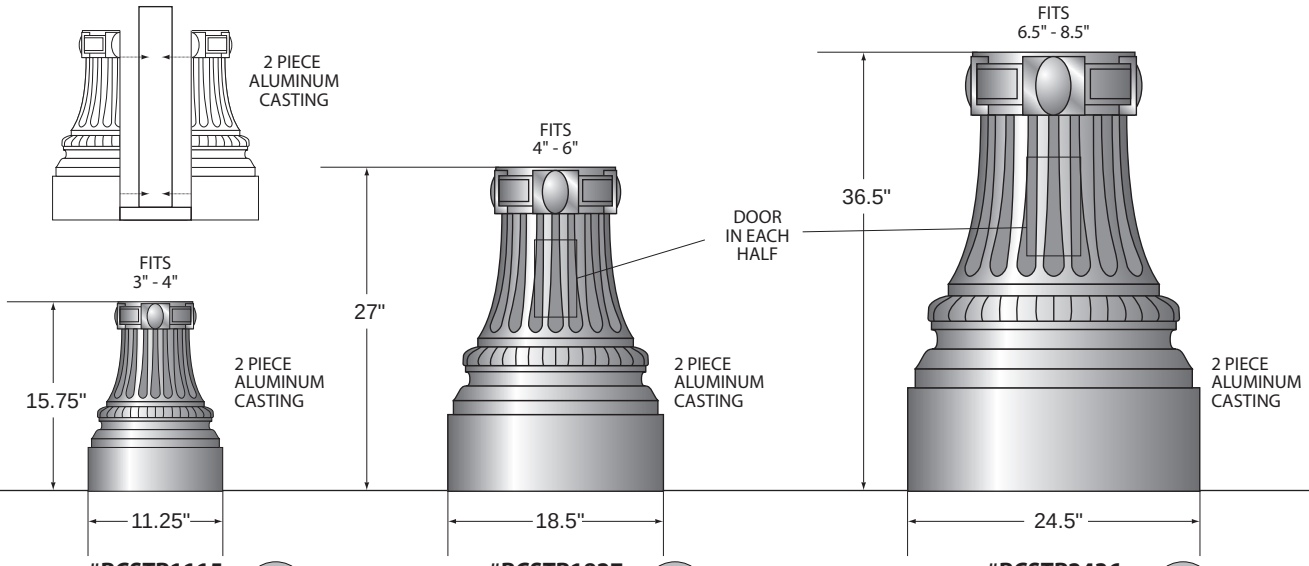

#BCSTR1115 STERLING ROUND SERIES 11.25"

#BCSTR1827 STERLING ROUND SERIES 18.5"

#BCSTR2436 STERLING ROUND SERIES 24.5"

Due to continuing improvement, 1245 Industries, LLC reserves the right to change dimensions, designs, and construction from that which is shown in this brochure.

1254 Industries, LLC, 1444 Alpine Pl, San Marcos CA 92078 • VOICE 760.798.8531 • FAX 760.798.8535
sales@1254industries.com • WWW.1254INDUSTRIES.COM

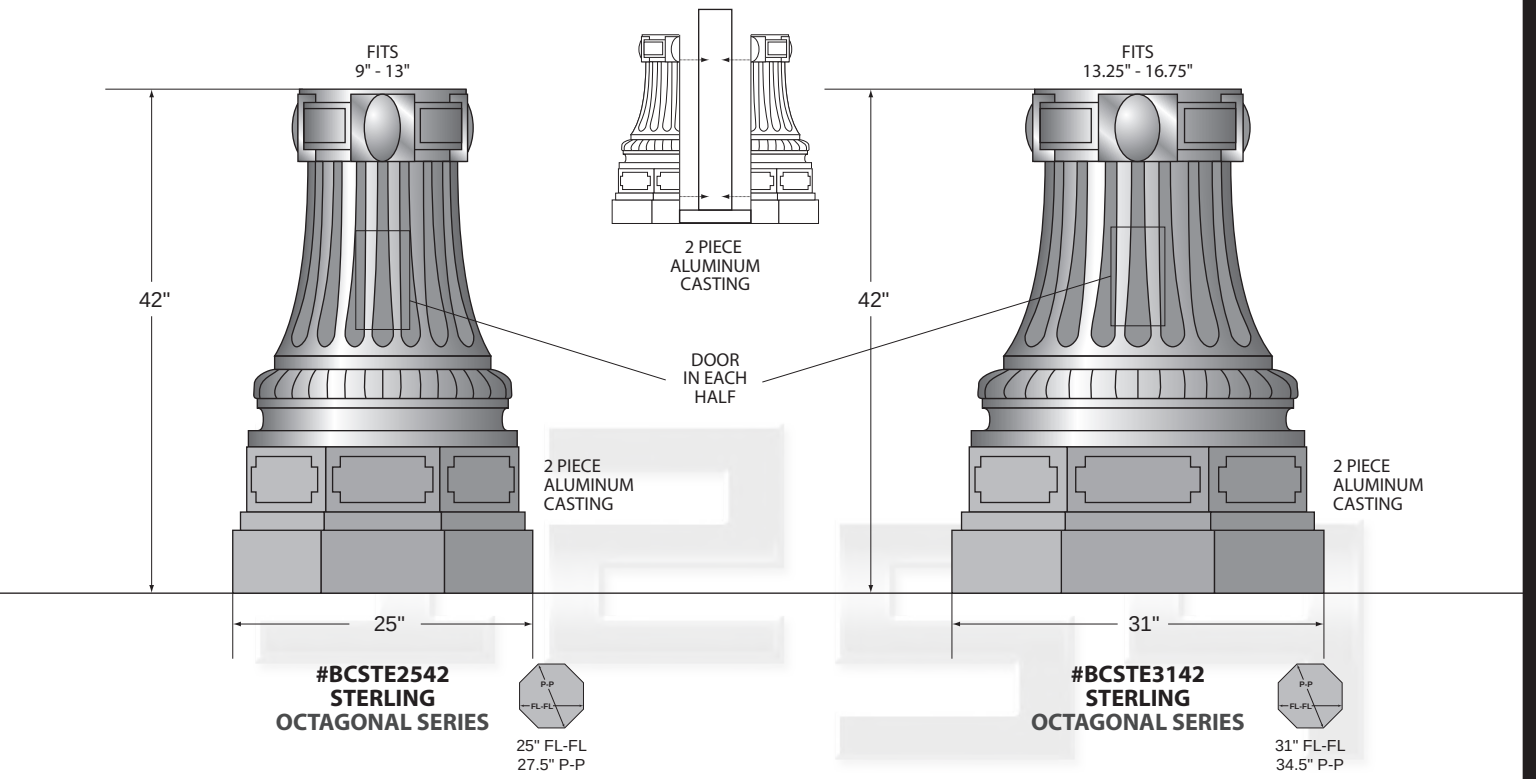

#BCSTE2542
STERLING
OCTAGONAL SERIES

#BCSTE3142
STERLING
OCTAGONAL SERIES

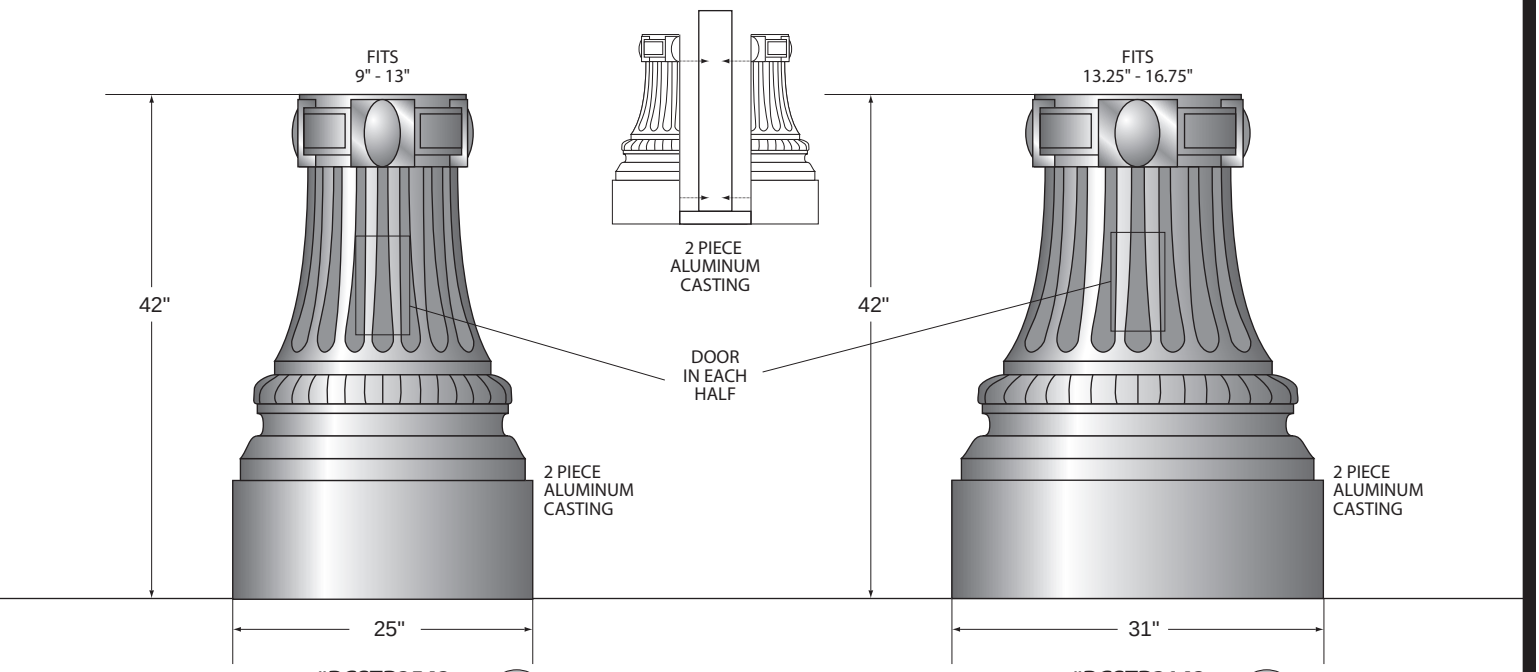

#BCSTR2542
STERLING
ROUND SERIES

25"

#BCSTR3142
STERLING
ROUND SERIES

31"

Due to continuing improvement, 1245 Industries, LLC reserves the right to change dimensions, designs, and construction from that which is shown in this brochure.

OXFORD OCTAGONAL *SERIES*

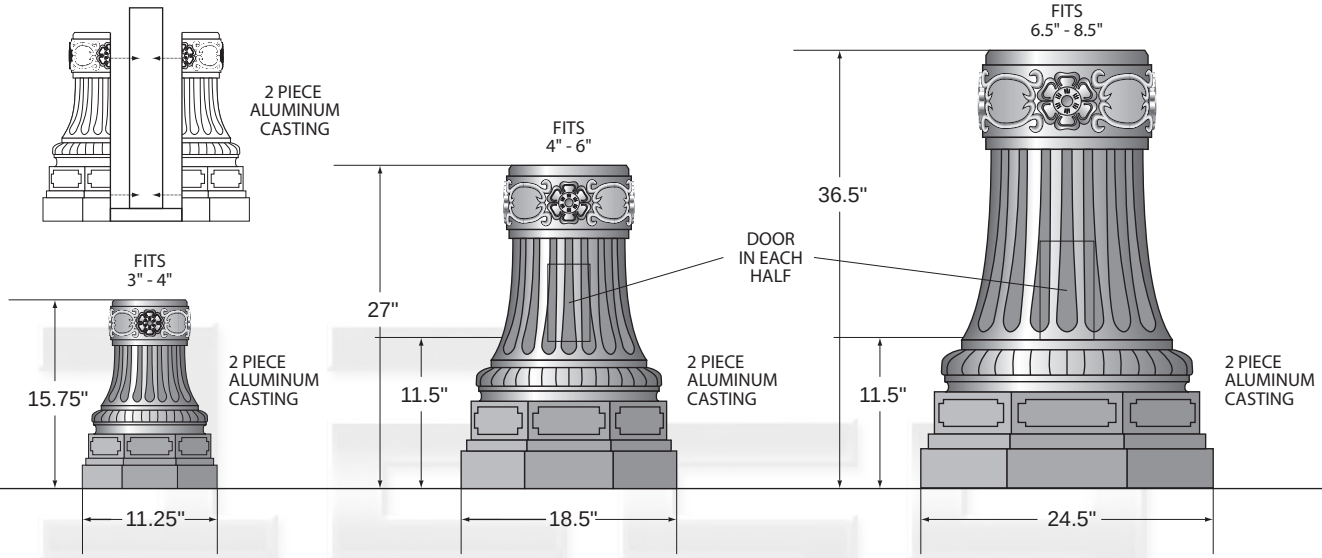

#BCOXO1115 OXFORD OCTAGONAL SERIES

11.25" FL-FL
12" P-P

#BCOXO1827 OXFORD OCTAGONAL SERIES

18.5" FL-FL
19.75" P-P

#BCOXO2436 OXFORD OCTAGONAL SERIES

24.5" FL-FL
25.75" P-P

OXFORD ROUND *SERIES*

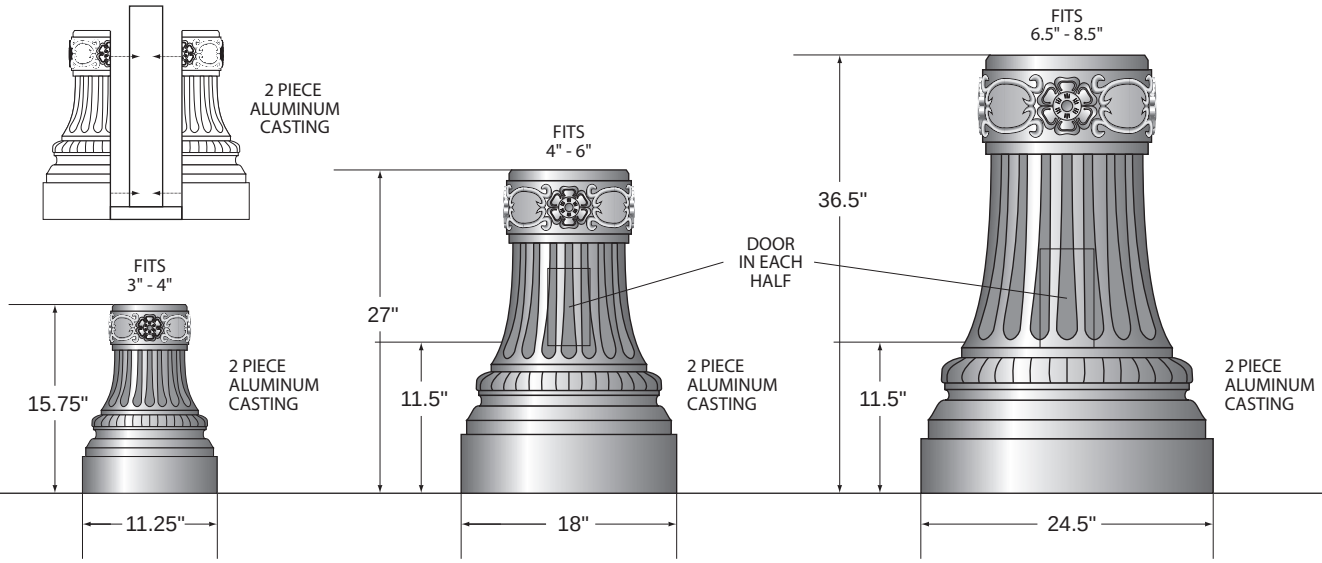

#BCOXF1115 OXFORD ROUND SERIES 11.25"

#BCOXF1827 OXFORD ROUND SERIES 18"

#BCOXF2436 OXFORD ROUND SERIES 24.5"

Due to continuing improvement, 1245 Industries, LLC reserves the right to change dimensions, designs, and construction from that which is shown in this brochure.

1254 Industries, LLC, 1444 Alpine Pl, San Marcos CA 92078 • VOICE 760.798.8531 • FAX 760.798.8535
sales@1254industries.com • WWW.1254INDUSTRIES.COM

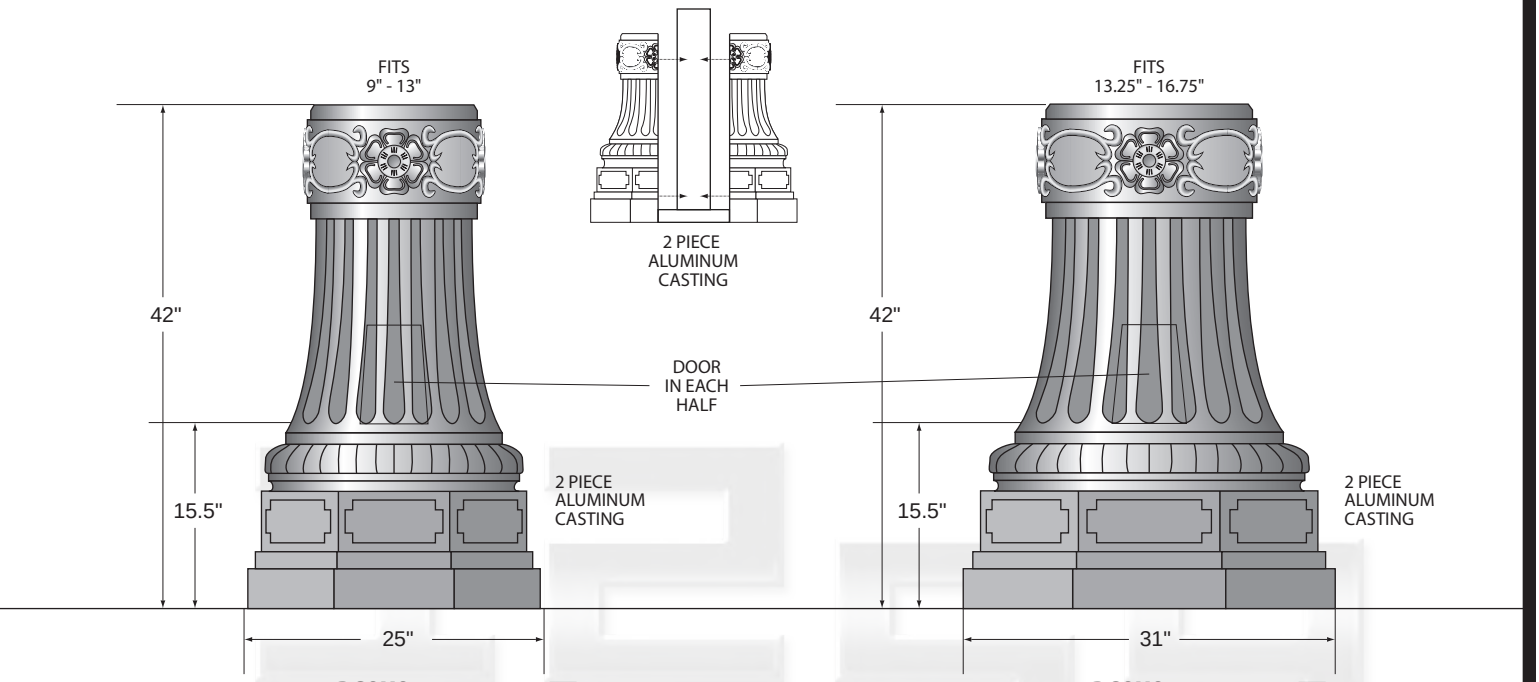

#BCOXO2542
OXFORD
OCTAGONAL SERIES

25" FL-FL
27.5" P-P

#BCOXO3142
OXFORD
OCTAGONAL SERIES

31" FL-FL
34.5" P-P

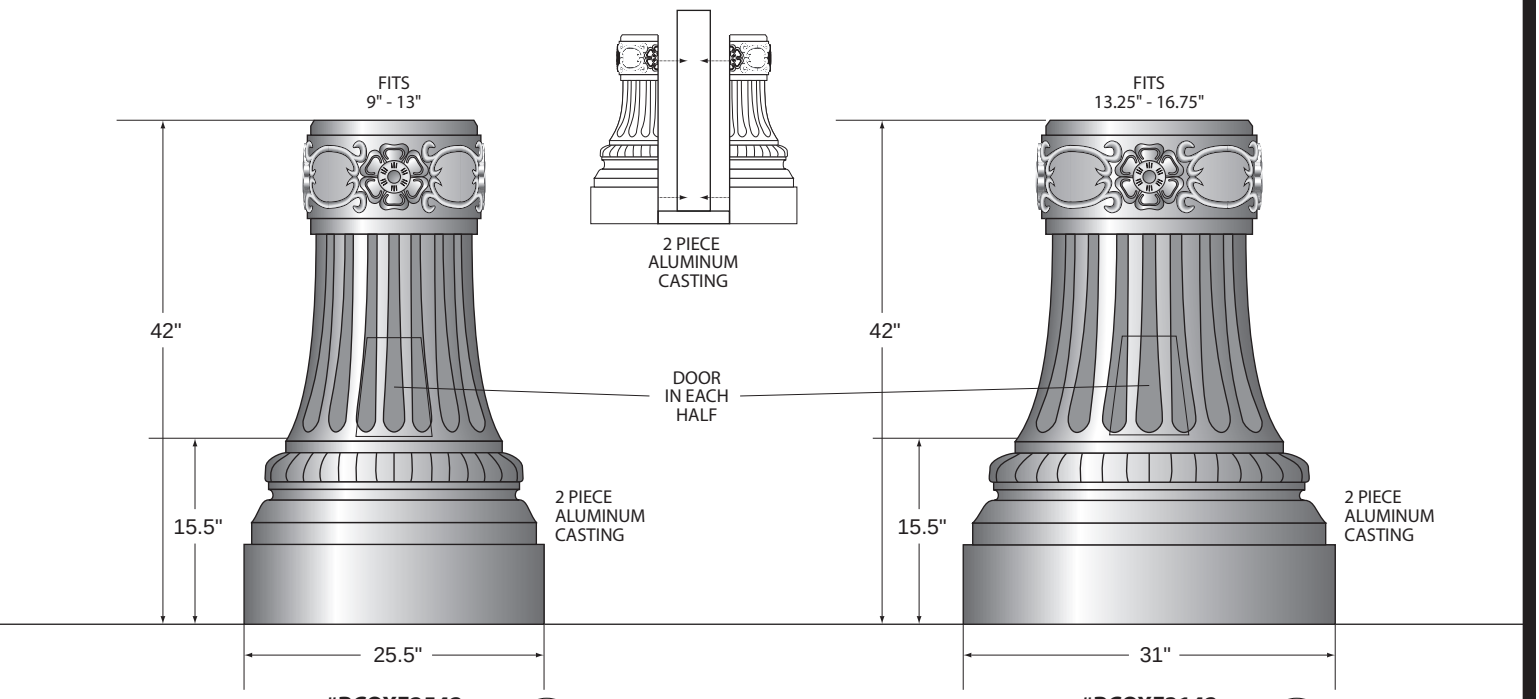

#BCOXF2542
OXFORD
ROUND SERIES

25.5"

#BCOXF3142
OXFORD
ROUND SERIES

31"

Due to continuing improvement, 1245 Industries, LLC reserves the right to change dimensions, designs, and construction from that which is shown in this brochure.

CORSICAN OCTAGONAL *SERIES*

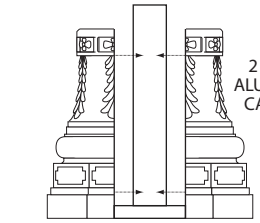

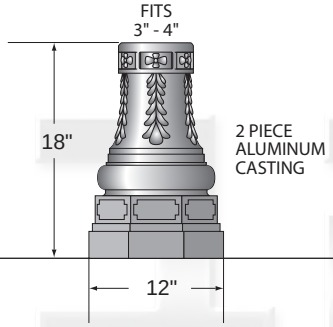

#BCCOR1218
CORSICAN
OCTAGONAL SERIES

12" FL-FL
13" P-P

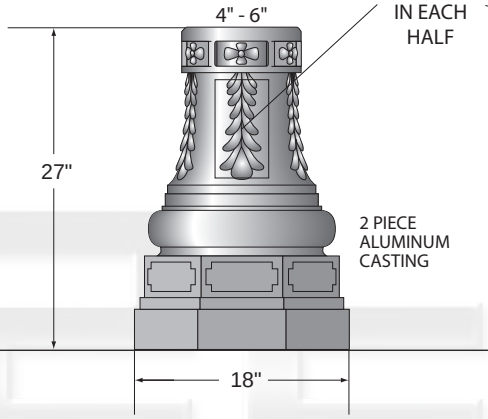

#BCCOR1827
CORSICAN
OCTAGONAL SERIES

18" FL-FL
19.75" P-P

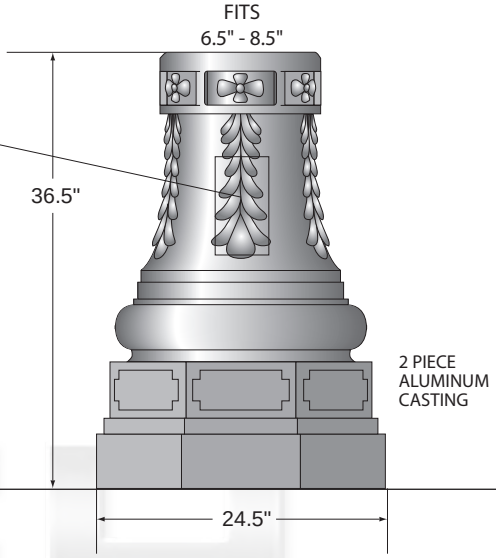

#BCCOR2436
CORSICAN
OCTAGONAL SERIES

24.5" FL-FL
25.75" P-P

CORSICAN ROUND *SERIES*

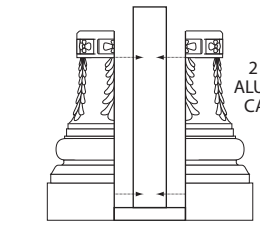

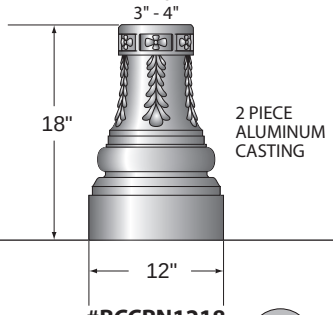

#BCCRN1218
CORSICAN
ROUND SERIES

12"

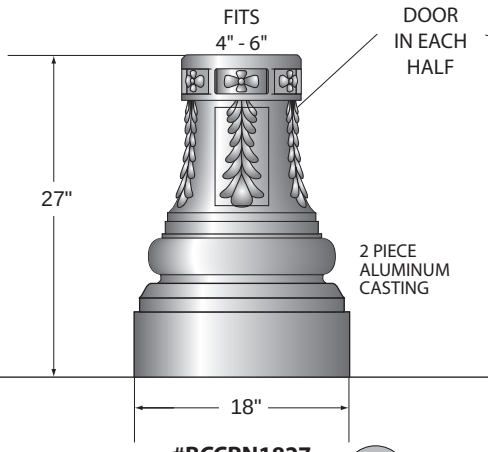

#BCCRN1827
CORSICAN
ROUND SERIES

18"

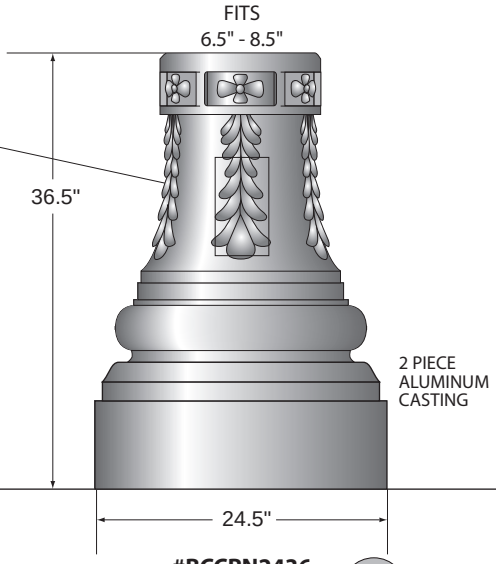

#BCCRN2436
CORSICAN
ROUND SERIES

24.5"

Due to continuing improvement, 1245 Industries, LLC reserves the right to change dimensions, designs, and construction from that which is shown in this brochure.

1254 Industries, LLC, 1444 Alpine Pl, San Marcos CA 92078 • VOICE 760.798.8531 • FAX 760.798.8535
sales@1254industries.com • WWW.1254INDUSTRIES.COM

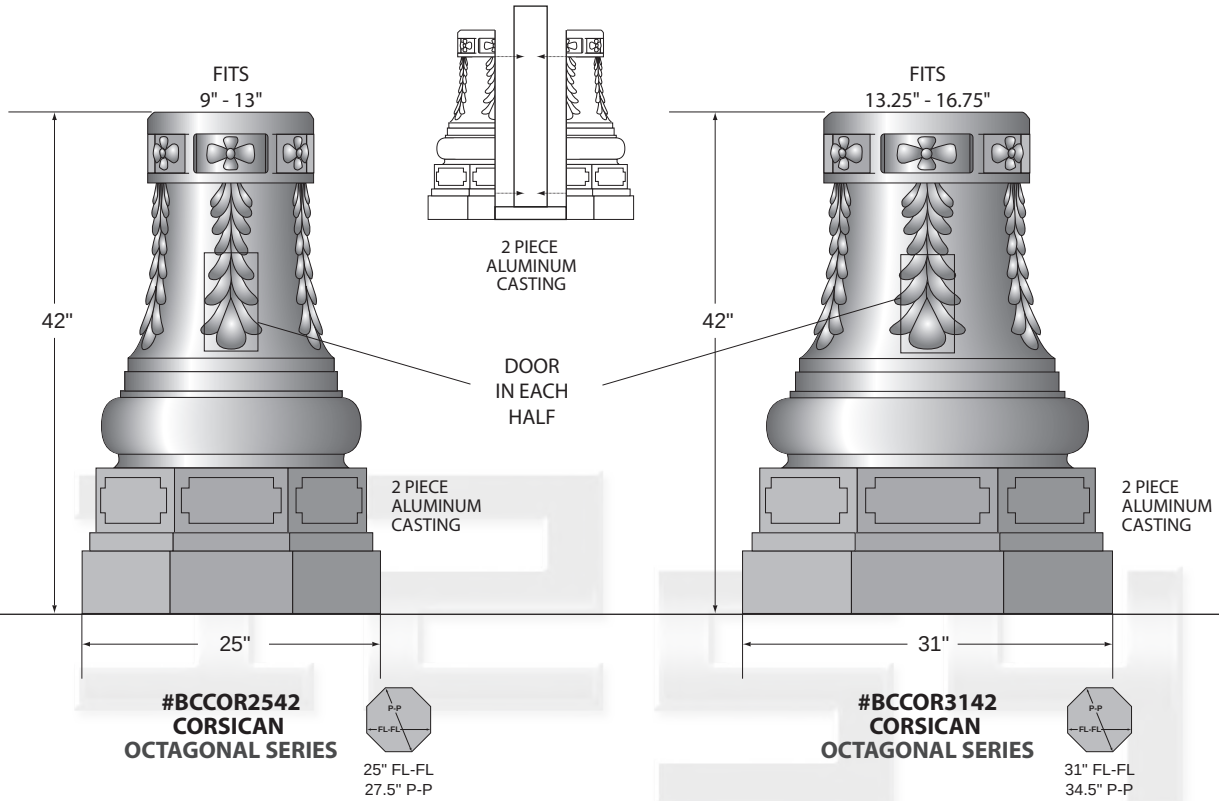

#BCCOR2542
CORSICAN
OCTAGONAL SERIES

25" FL-FL
27.5" P-P

#BCCOR3142
CORSICAN
OCTAGONAL SERIES

31" FL-FL
34.5" P-P

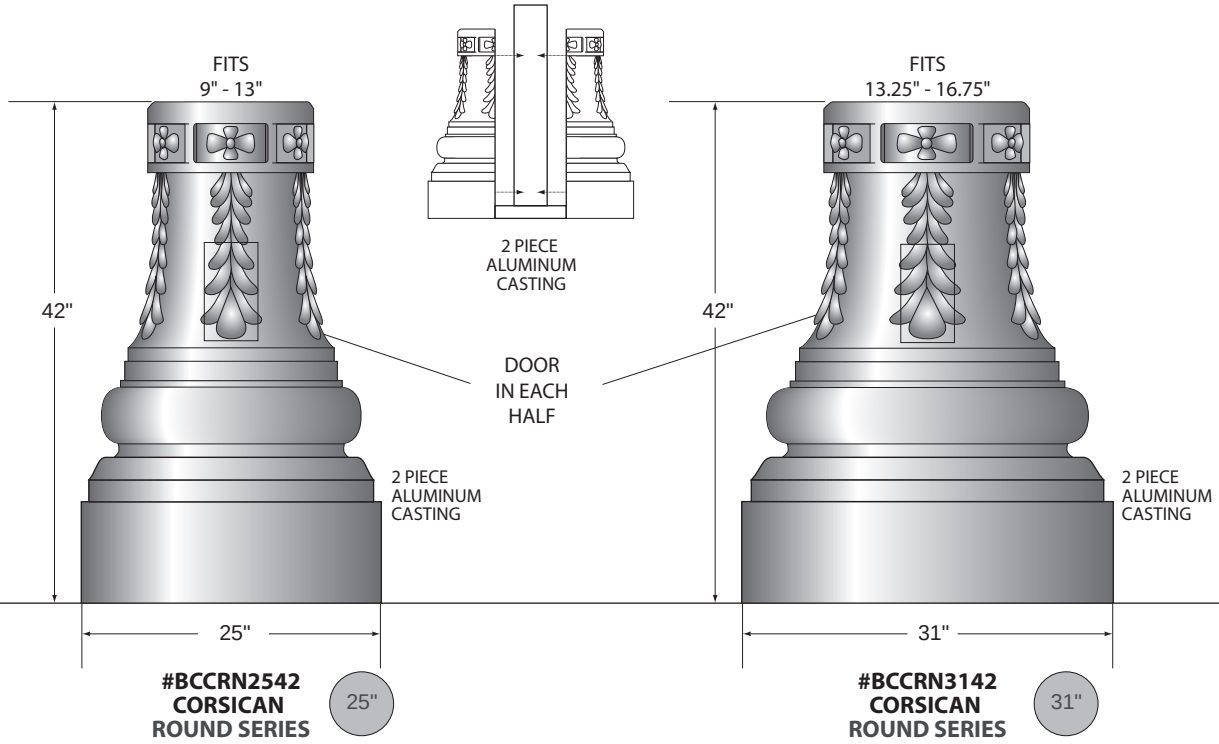

#BCCRN2542
CORSICAN
ROUND SERIES

#BCCRN3142
CORSICAN
ROUND SERIES

Due to continuing improvement, 1245 Industries, LLC reserves the right to change dimensions, designs, and construction from that which is shown in this brochure.

WASHINGTON OCTAGONAL *SERIES*

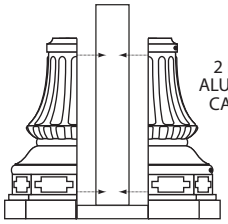

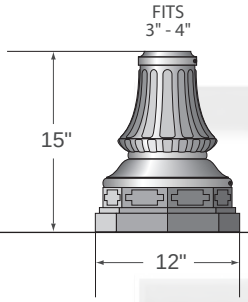

#BCWAO1215 WASHINGTON OCTAGONAL SERIES

12" FL-FL
12.75" P-P

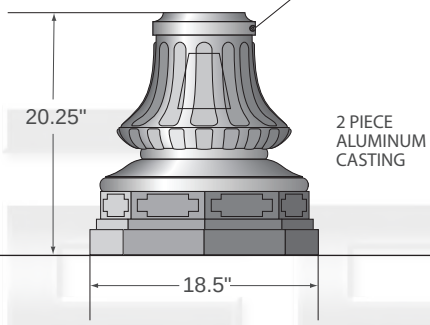

#BCWAO1820 WASHINGTON OCTAGONAL SERIES

18.5" FL-FL
19.5" P-P

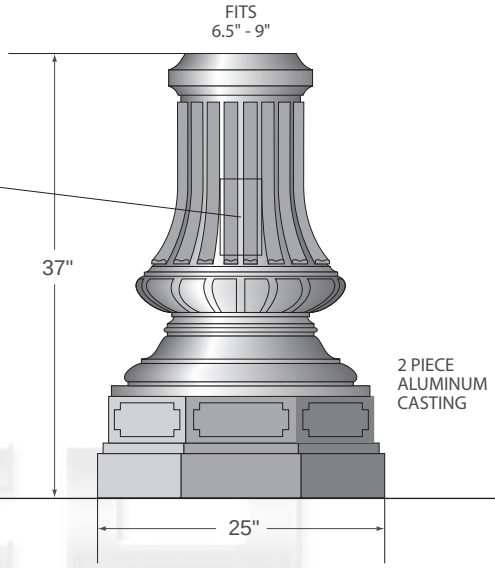

#BCWAO2537 WASHINGTON OCTAGONAL SERIES

25" FL-FL
28.25" P-P

WASHINGTON ROUND *SERIES*

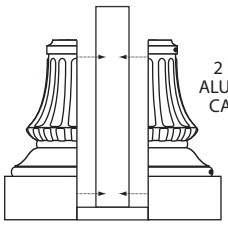

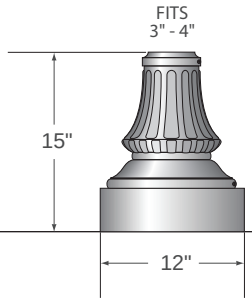

#BCWAR1215 WASHINGTON ROUND SERIES

12"

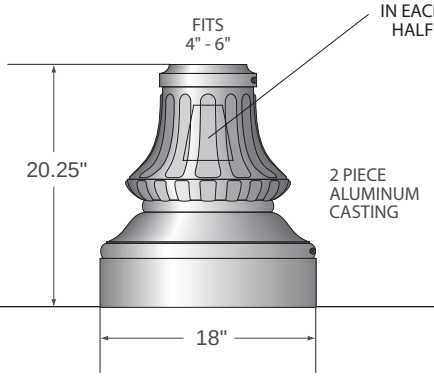

#BCWAR1820 WASHINGTON ROUND SERIES

18"

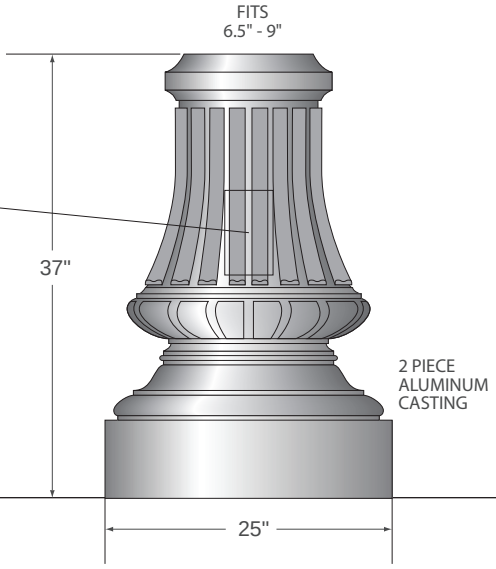

#BCWAR2537 WASHINGTON ROUND SERIES

25"

Due to continuing improvement, 1245 Industries, LLC reserves the right to change dimensions, designs, and construction from that which is shown in this brochure.

1254 Industries, LLC, 1444 Alpine Pl, San Marcos CA 92078 • VOICE 760.798.8531 • FAX 760.798.8535
sales@1254industries.com • WWW.1254INDUSTRIES.COM

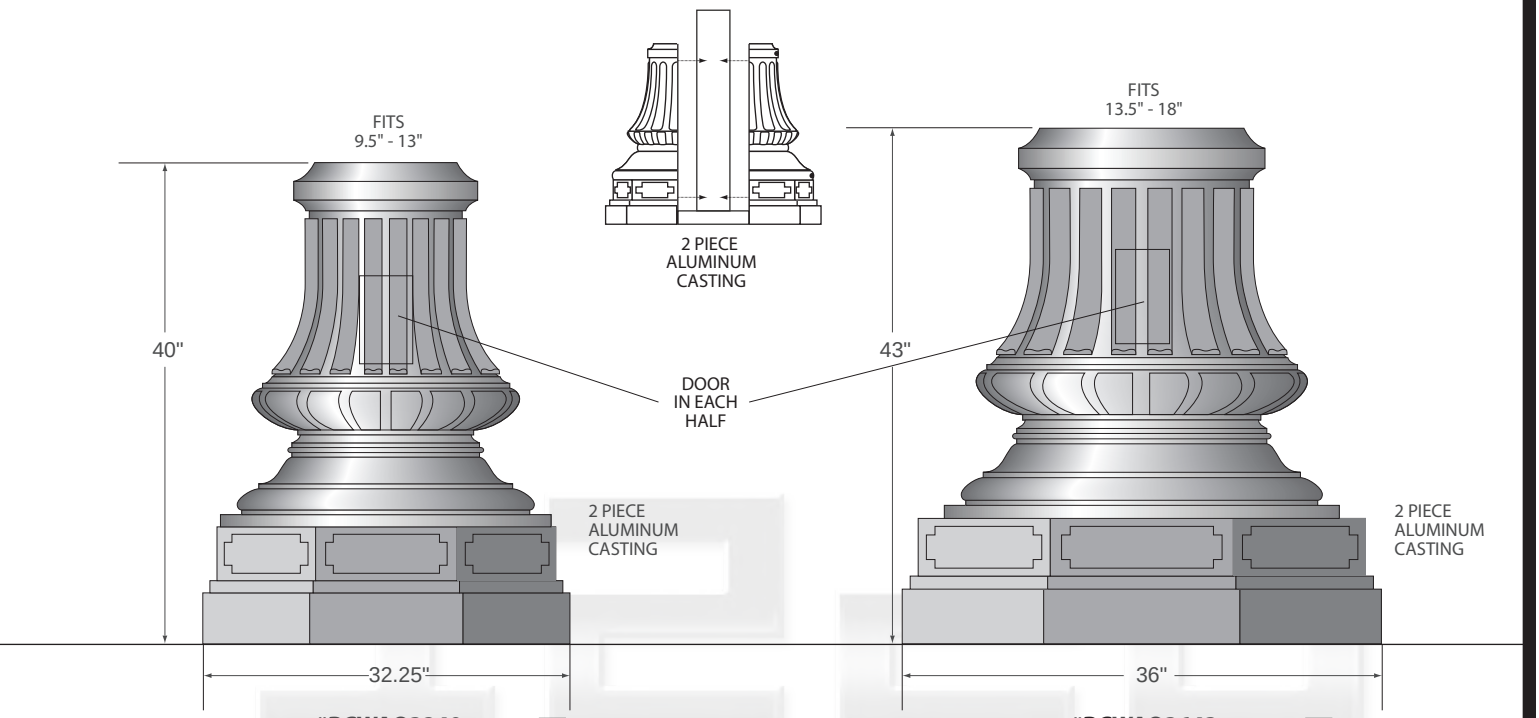

#BCWAO3240
WASHINGTON
OCTAGONAL SERIES

32.25" FL-FL
34.75" P-P

#BCWAO3643
WASHINGTON
OCTAGONAL SERIES

36" FL-FL
40" P-P

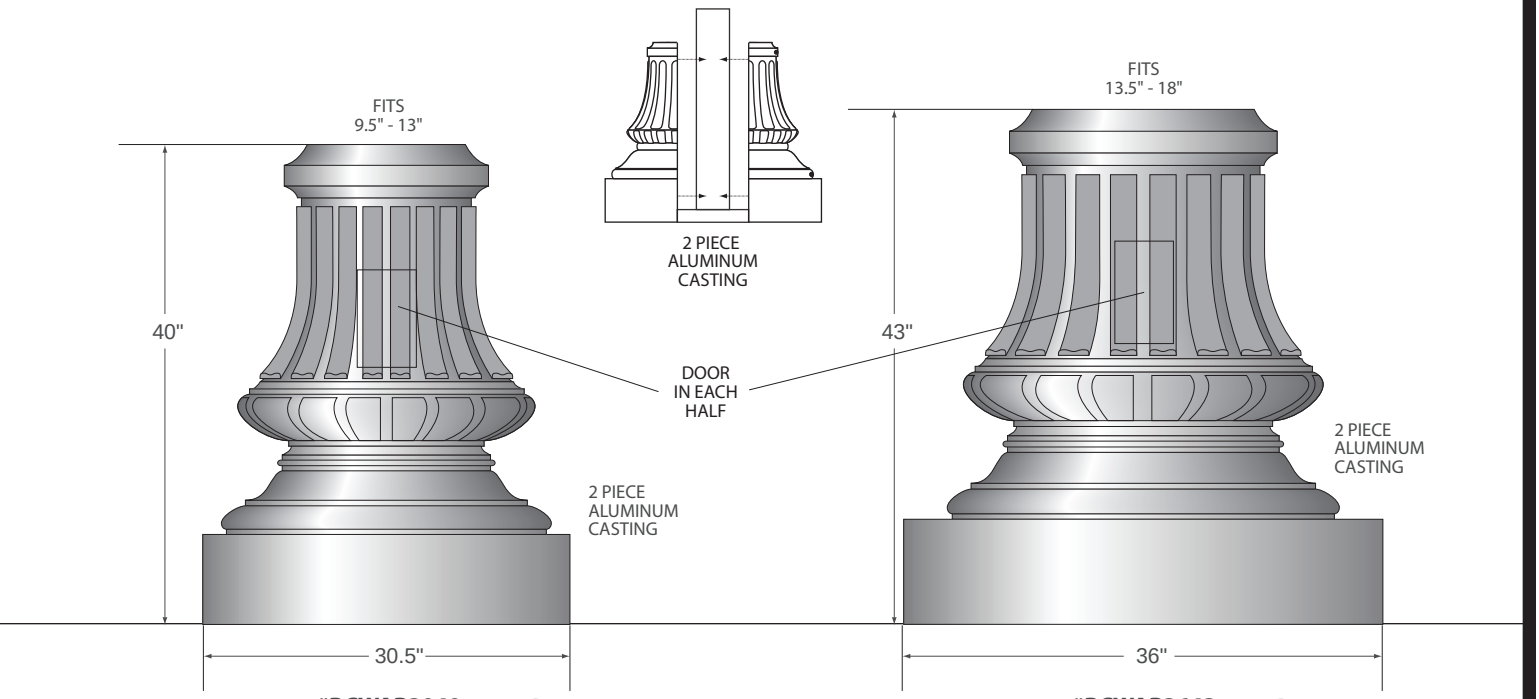

#BCWAR3040
WASHINGTON
ROUND SERIES

30.5"

#BCWAR3643
WASHINGTON
ROUND SERIES

36"

Due to continuing improvement, 1245 Industries, LLC reserves the right to change dimensions, designs, and construction from that which is shown in this brochure.

COAST
SERIES

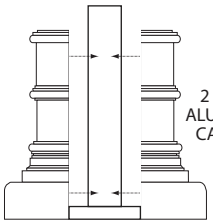

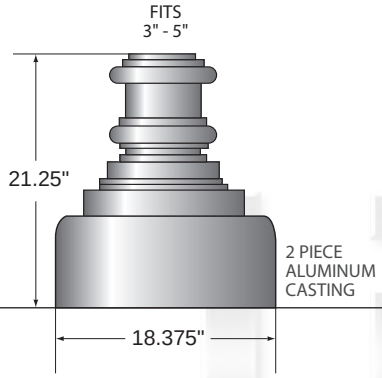

#BCCST1821 COAST SERIES 18.375"

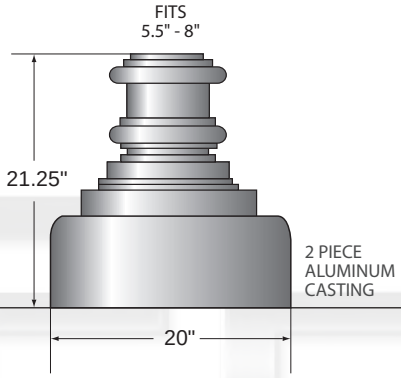

#BCCST2021 COAST SERIES 20"

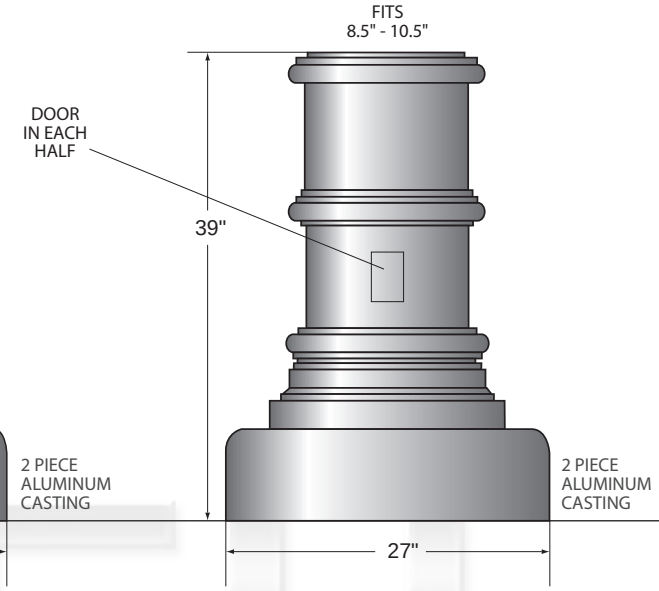

#BCCST2739 COAST SERIES 27"

LAGUNA
SERIES

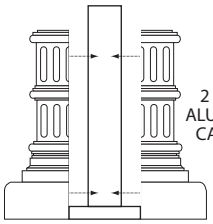

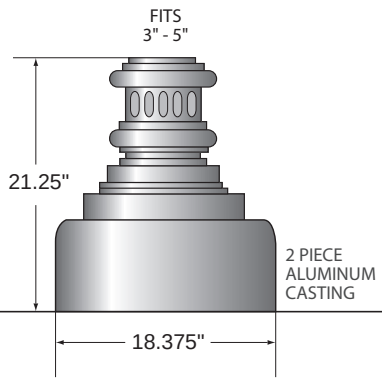

#BCLAG1821 LAGUNA SERIES 18.375"

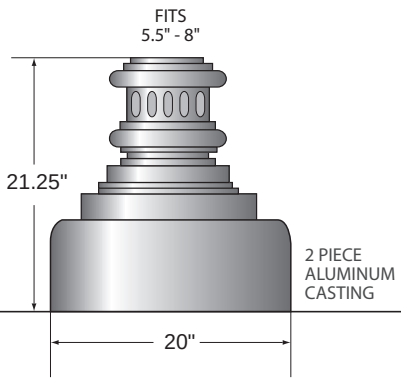

#BCLAG2021 LAGUNA SERIES 20"

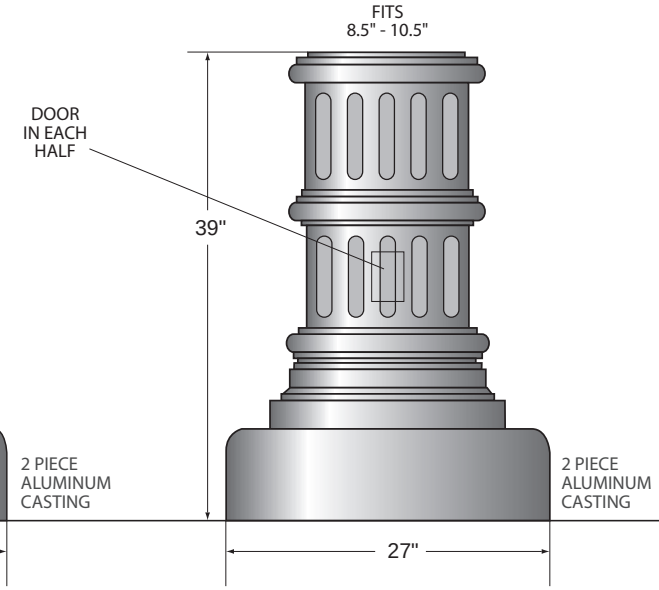

#BCLAG2739 LAGUNA SERIES 27"

Due to continuing improvement, 1245 Industries, LLC reserves the right to change dimensions, designs, and construction from that which is shown in this brochure.

1254 Industries, LLC, 1444 Alpine Pl, San Marcos CA 92078 • VOICE 760.798.8531 • FAX 760.798.8535
sales@1254industries.com • WWW.1254INDUSTRIES.COM

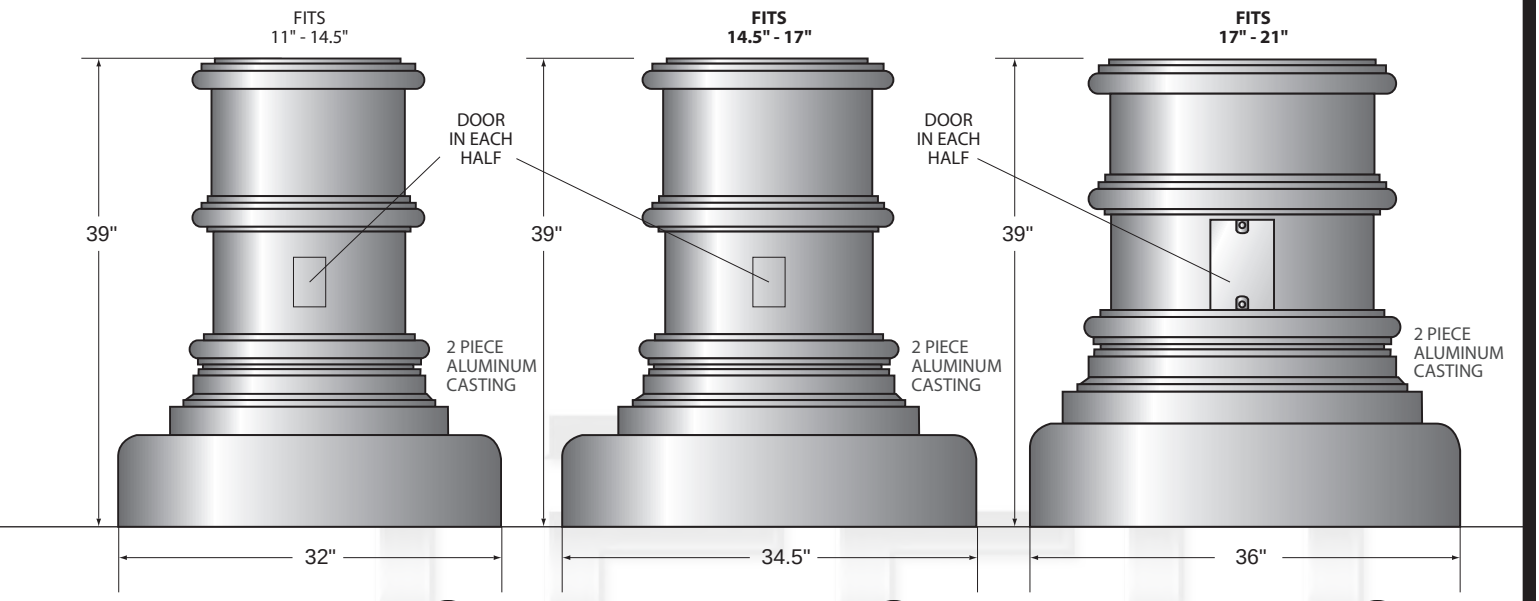

#BCCST3239 COAST SERIES 32"

#BCCST3439 COAST SERIES 34.5"

#BCCST3639 COAST SERIES 36"

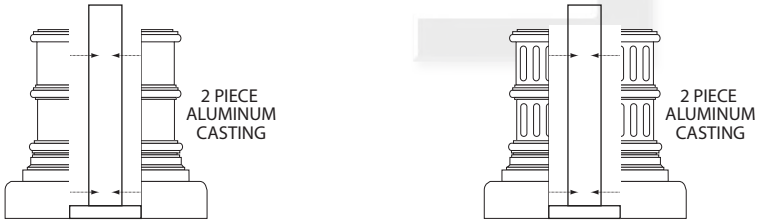

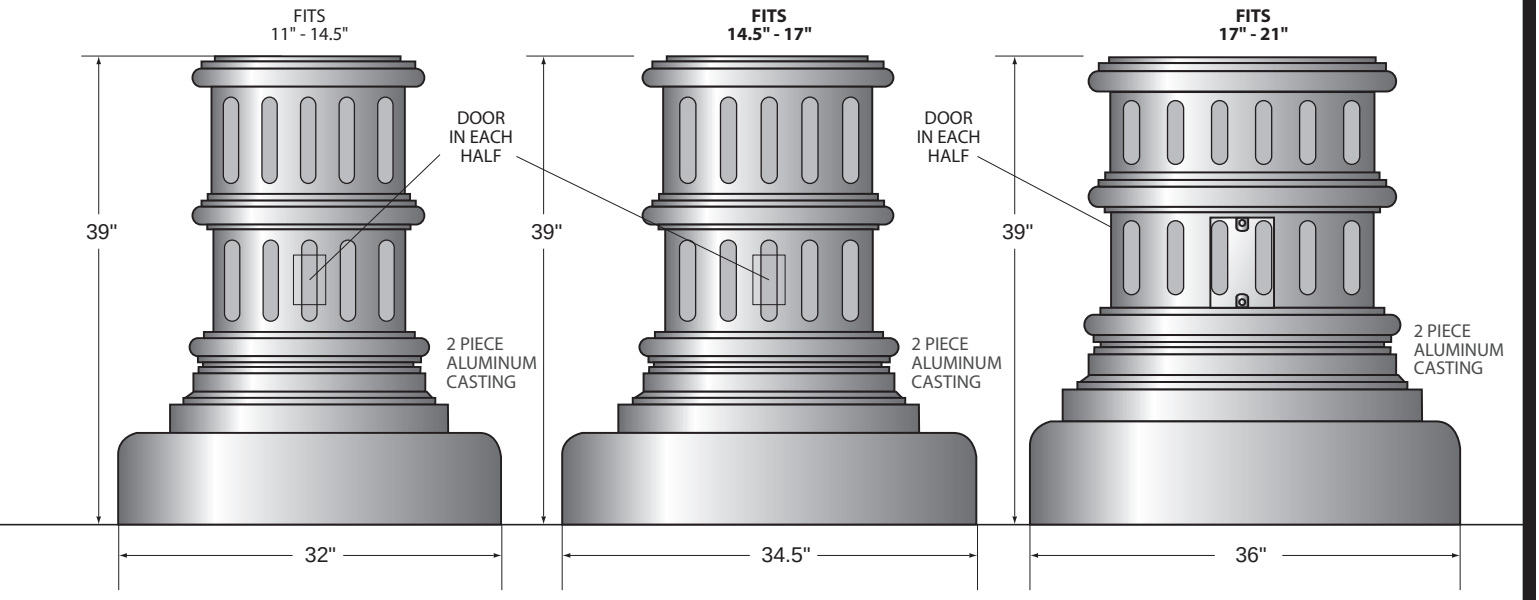

#BCLAG3239 LAGUNA SERIES 32"

#BCLAG3439 LAGUNA SERIES 34.5"

#BCLAG3639 LAGUNA SERIES 36"

Due to continuing improvement, 1245 Industries, LLC reserves the right to change dimensions, designs, and construction from that which is shown in this brochure.

TUSTIN HEXAGON
FLUTED SERIES

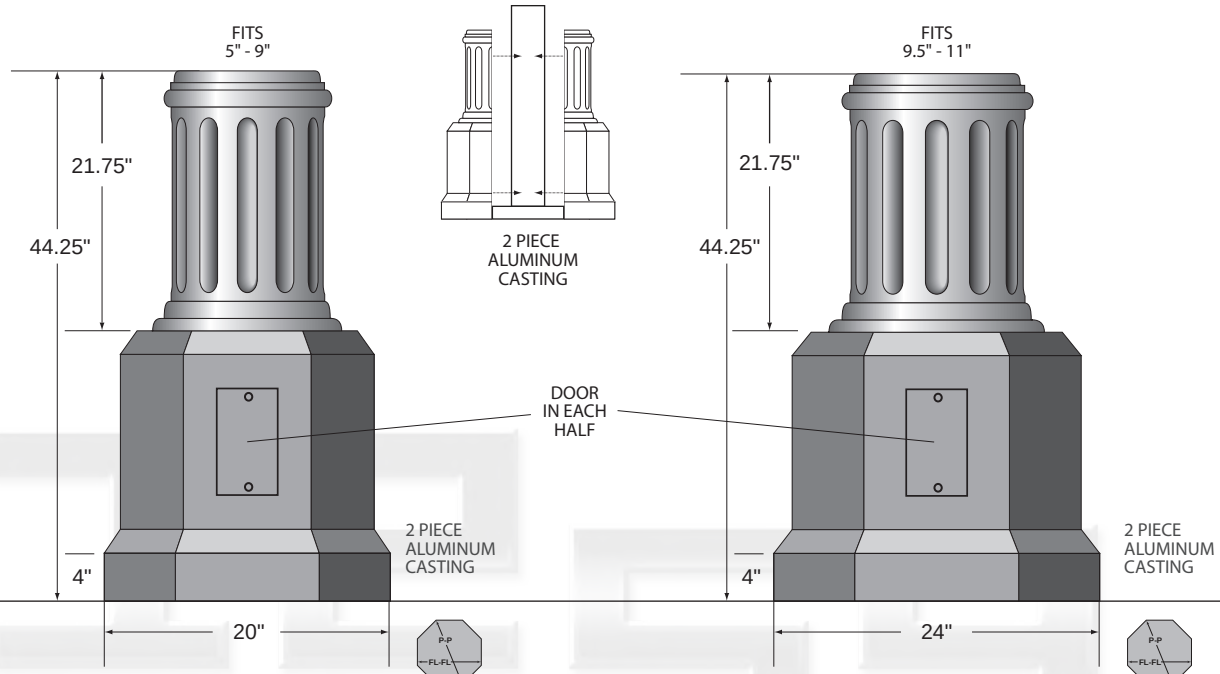

#BCTUS2044
TUSTIN HEXAGON
SERIES

20" FL-FL
23.75" P-P

#BCTUS2444
TUSTIN HEXAGON
SERIES

24" FL-FL
27.5" P-P

TUSTIN HEXAGON
SMOOTH SERIES

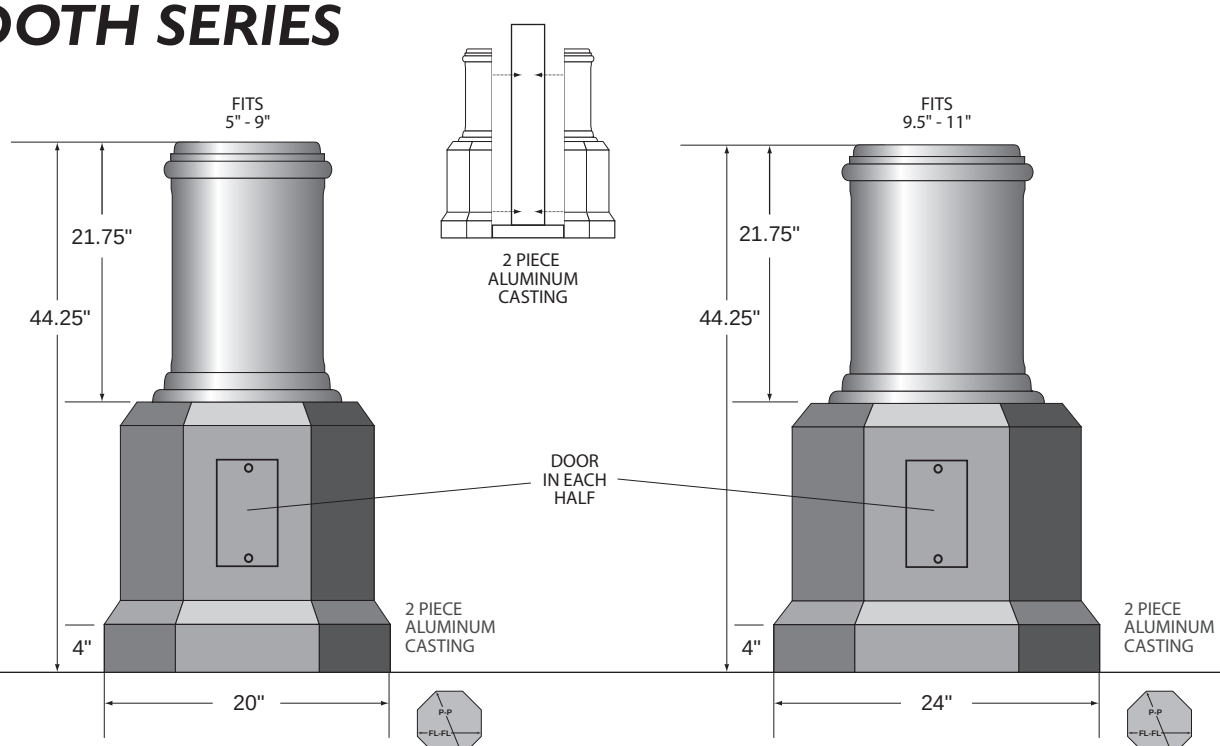

#BCTUS2044 - S
TUSTIN HEXAGON
SERIES

20" FL-FL
23.75" P-P

#BCTUS2444 - S
TUSTIN HEXAGON
SERIES

24" FL-FL
27.5" P-P

Due to continuing improvement, 1245 Industries, LLC reserves the right to change dimensions, designs, and construction from that which is shown in this brochure.

1254 Industries, LLC, 1444 Alpine Pl, San Marcos CA 92078 • VOICE 760.798.8531 • FAX 760.798.8535
sales@1254industries.com • WWW.1254INDUSTRIES.COM

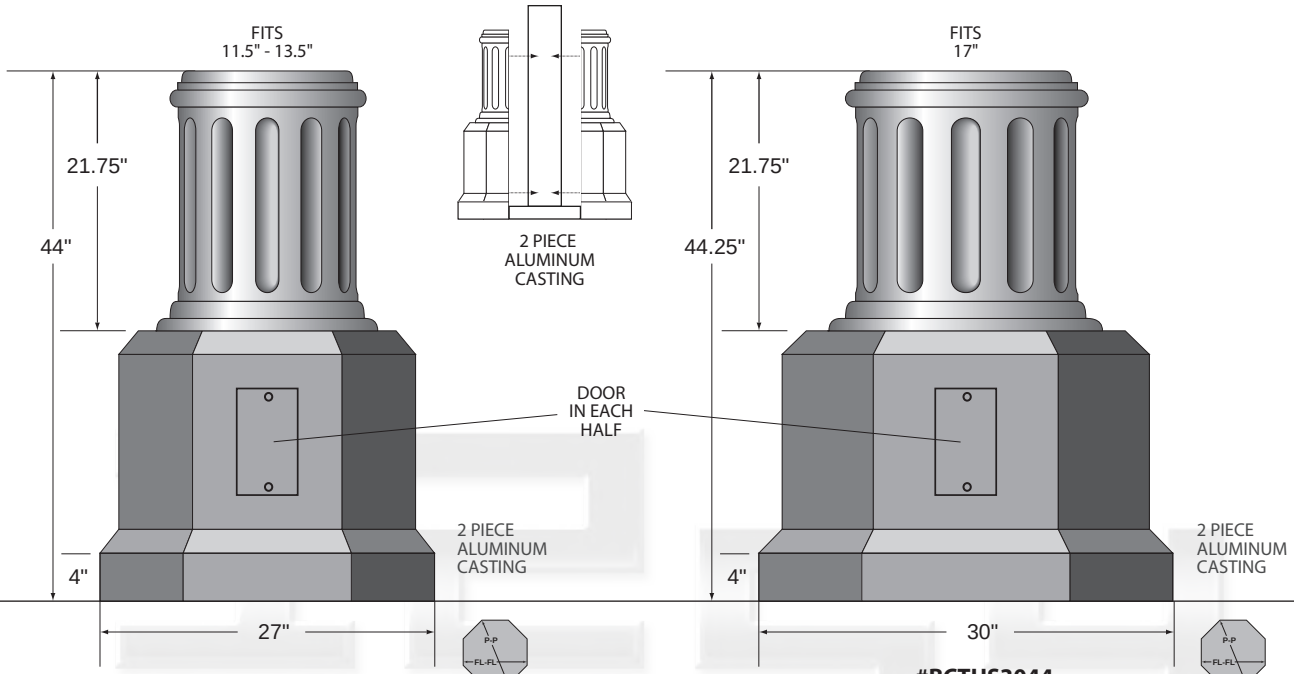

#BCTUS2744
TUSTIN HEXAGON
SERIES

#BCTUS3044
TUSTIN HEXAGON
SERIES

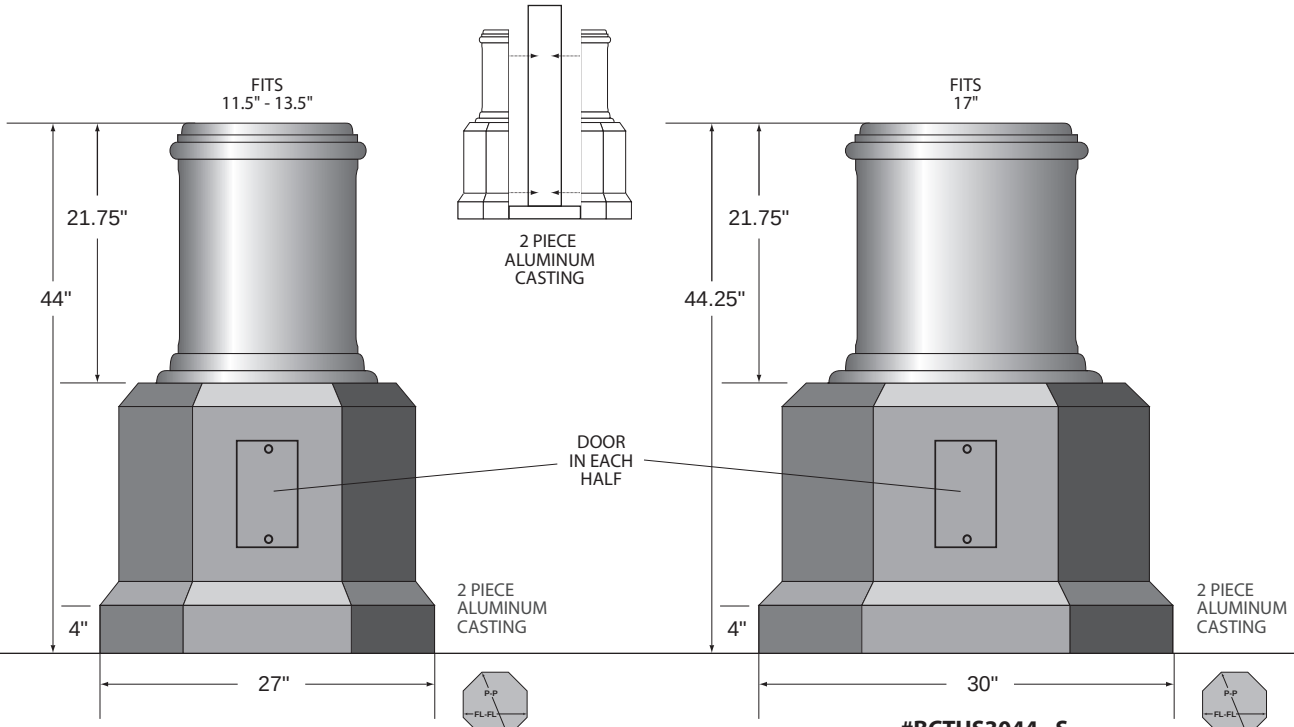

#BCTUS2744 - S
TUSTIN HEXAGON
SERIES

#BCTUS3044 - S
TUSTIN HEXAGON
SERIES

Due to continuing improvement, 1245 Industries, LLC reserves the right to change dimensions, designs, and construction from that which is shown in this brochure.

TRILOGY *SERIES*

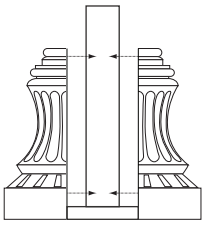

2 PIECE ALUMINUM CASTING

FITS 2" - 4"

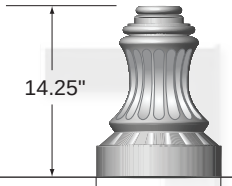

#BCTRI1214 TRILOGY SERIES 12"

FITS 4" - 5"

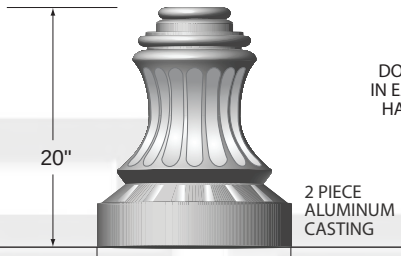

#BCTRI1620 TRILOGY SERIES 16"

FITS 5" - 8"

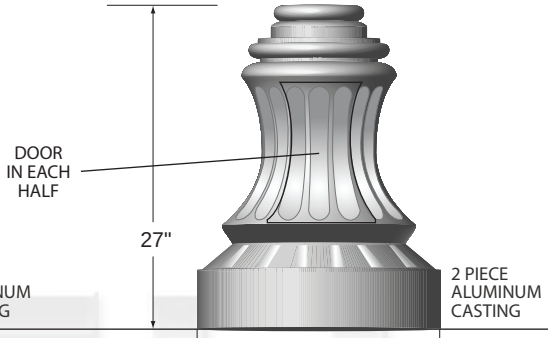

#BCTRI2027 TRILOGY SERIES 20"

TAMPA *SERIES*

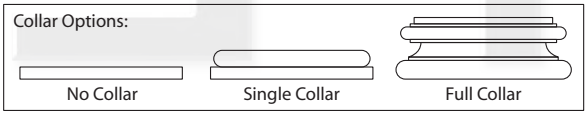

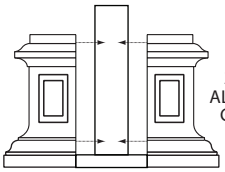

2 PIECE ALUMINUM CASTING

FITS
NO COLLAR: 4" - 6.5"
SINGLE COLLAR: 4" - 6.5"
FULL COLLAR: 4" - 6"

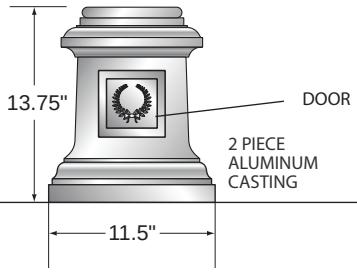

#BCTAM1112 TAMPA BASE 11.5"

FITS
NO COLLAR: 6.5" - 10"
SINGLE COLLAR: 6.5" - 10"
FULL COLLAR: 6" - 9"

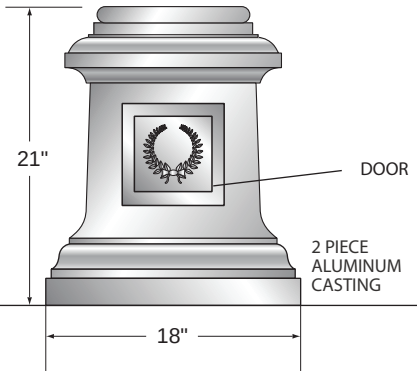

#BCTAM1719 TAMPA BASE 18"

FITS
NO COLLAR: 10" - 13"
SINGLE COLLAR: 10" - 13"
FULL COLLAR: 9" - 11"

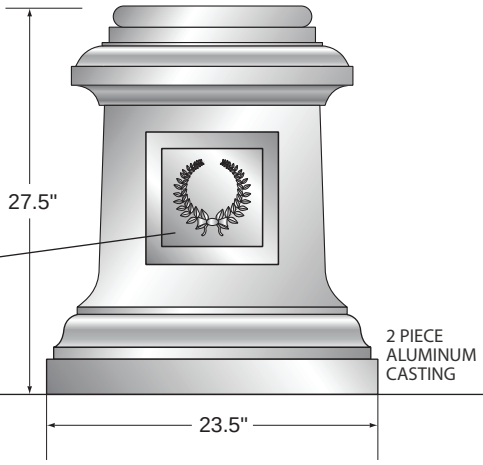

#BCTAM2326 TAMPA BASE 23.5"

Due to continuing improvement, 1245 Industries, LLC reserves the right to change dimensions, designs, and construction from that which is shown in this brochure.

1254 Industries, LLC, 1444 Alpine Pl, San Marcos CA 92078 • VOICE 760.798.8531 • FAX 760.798.8535
sales@1254industries.com • WWW.1254INDUSTRIES.COM

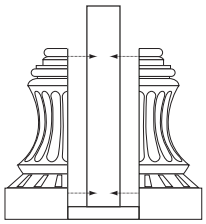

2 PIECE
ALUMINUM
CASTING

FITS
9" - 13"

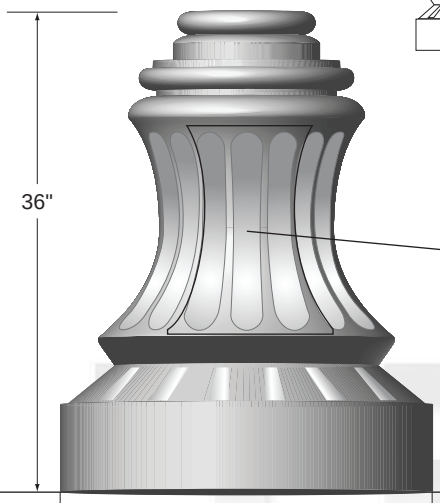

#BCTRI2836
TRILOGY
SERIES

28"

FITS
14" - 18"

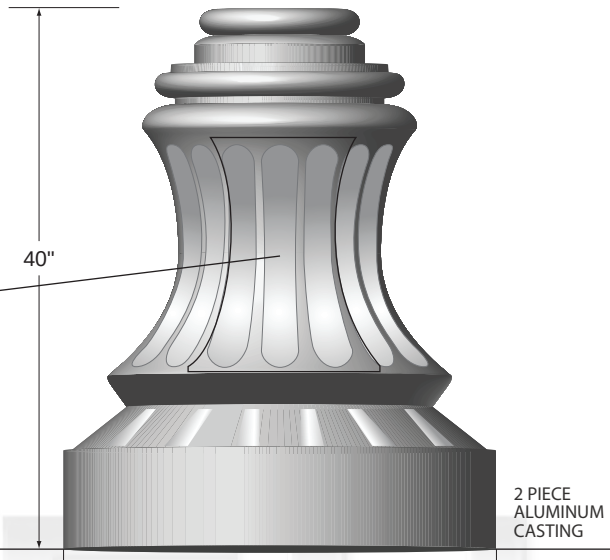

#BCTRI3440
TRILOGY
SERIES

34"

Collar Options:

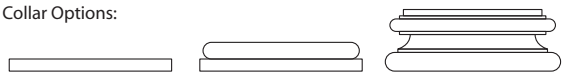

No Collar | Single Collar | Full Collar

FITS
NO COLLAR: 13" - 18"
SINGLE COLLAR: 13" - 18"
FULL COLLAR: 11" - 16.5"

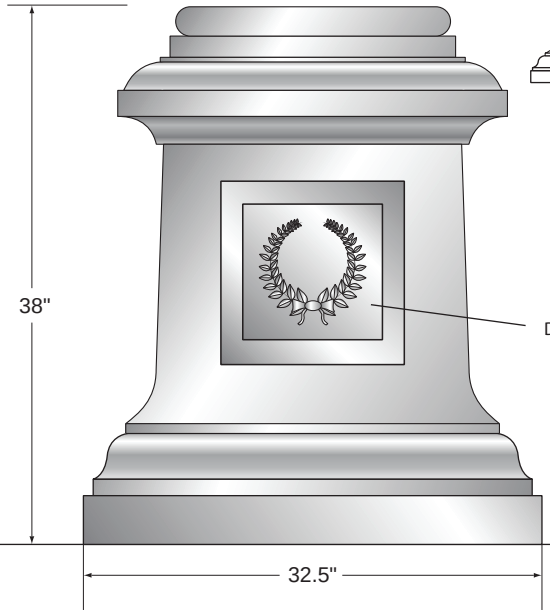

#BCTAM3034
TAMPA
BASE

32.5"

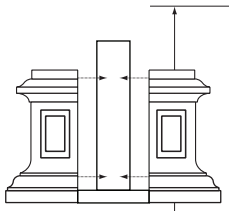

2 PIECE
ALUMINUM
CASTING

FITS
NO COLLAR: 18" - 22"
SINGLE COLLAR: 18" - 22"
FULL COLLAR: 16.5" - 20"

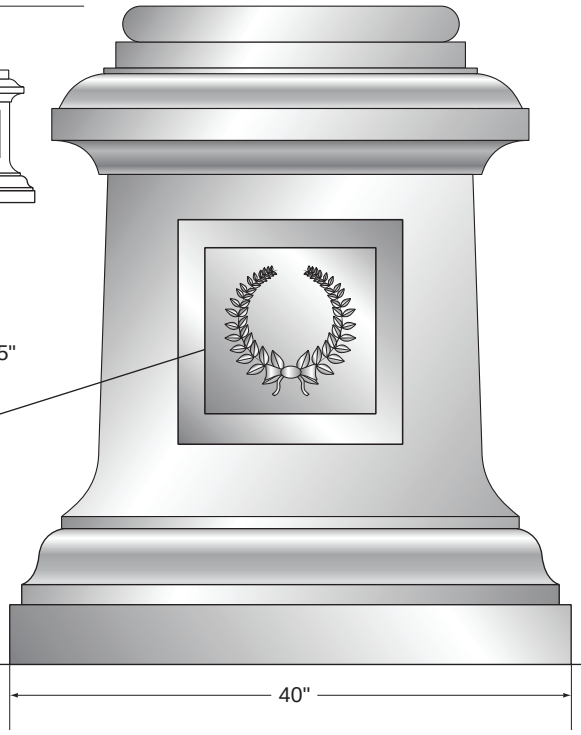

#BCTAM3645
TAMPA
BASE

40"

Due to continuing improvement, 1245 Industries, LLC reserves the right to change dimensions, designs, and construction from that which is shown in this brochure.

OCEAN FLUTED
ROUND SERIES

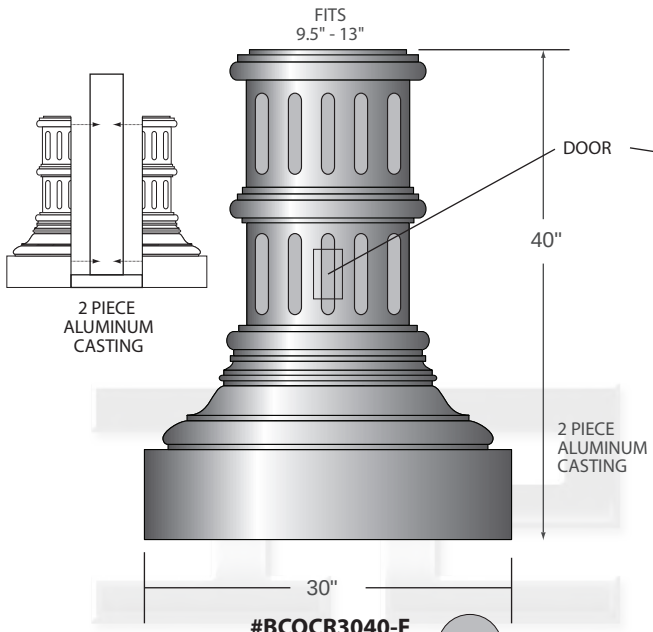

#BCOCR3040-F
OCEAN
SERIES

30"

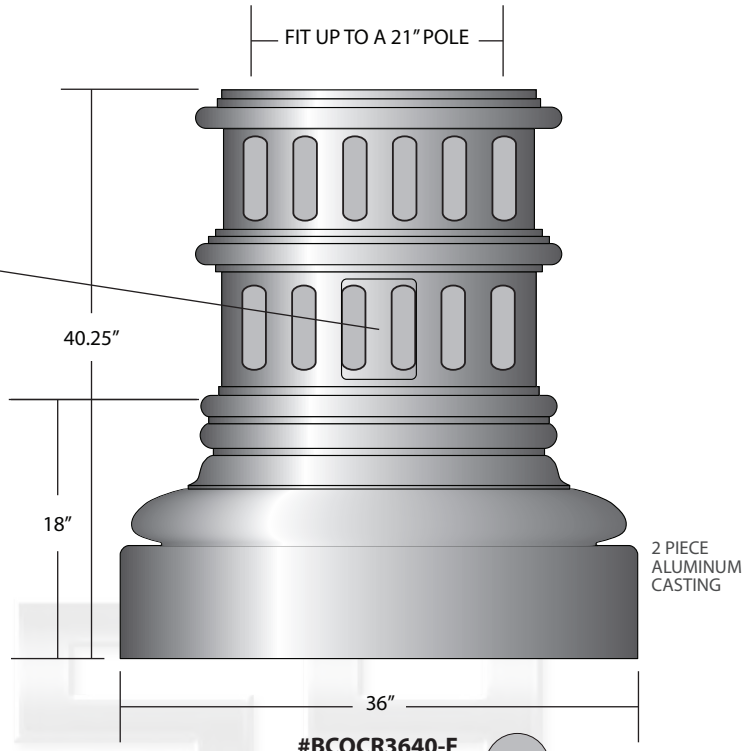

#BCOCR3640-F
OCEAN
SERIES

36"

OCEAN FLUTED
OCTAGONAL SERIES

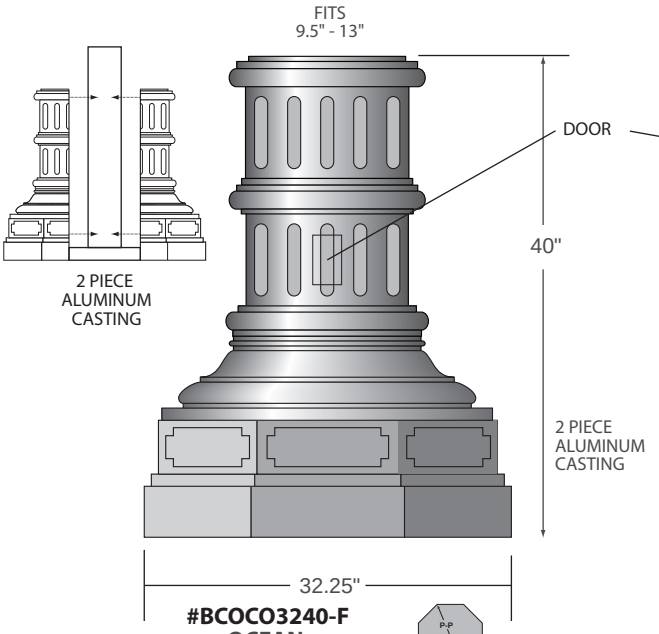

#BCOCO3240-F
OCEAN
OCTAGONAL SERIES

32.25" FL-FL
34.75" P-P

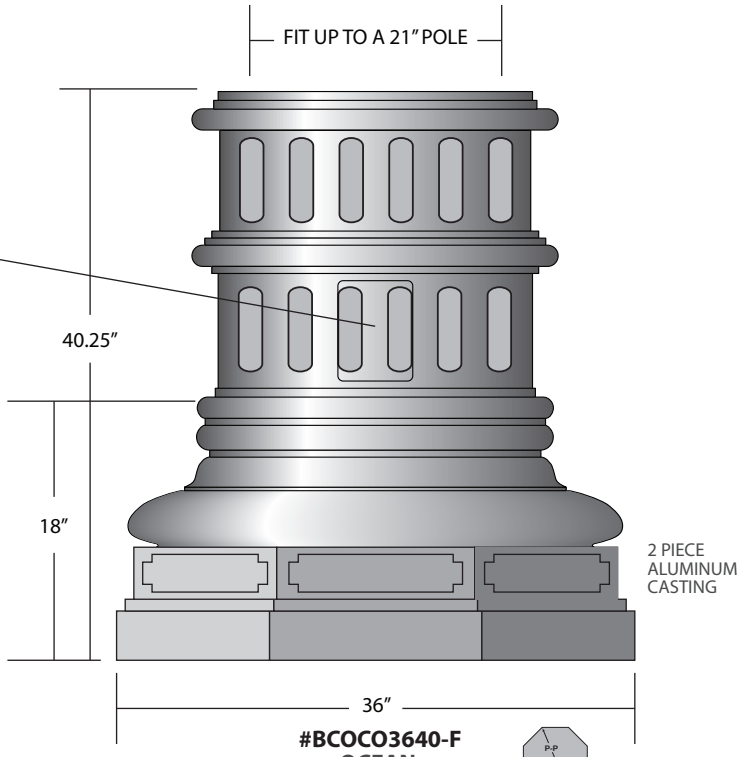

#BCOCO3640-F
OCEAN
OCTAGONAL SERIES

36" FL-FL
40" P-P

Due to continuing improvement, 1245 Industries, LLC reserves the right to change dimensions, designs, and construction from that which is shown in this brochure.

1254 Industries, LLC, 1444 Alpine Pl, San Marcos CA 92078 • VOICE 760.798.8531 • FAX 760.798.8535
sales@1254industries.com • WWW.1254INDUSTRIES.COM

OCEAN SMOOTH
ROUND SERIES

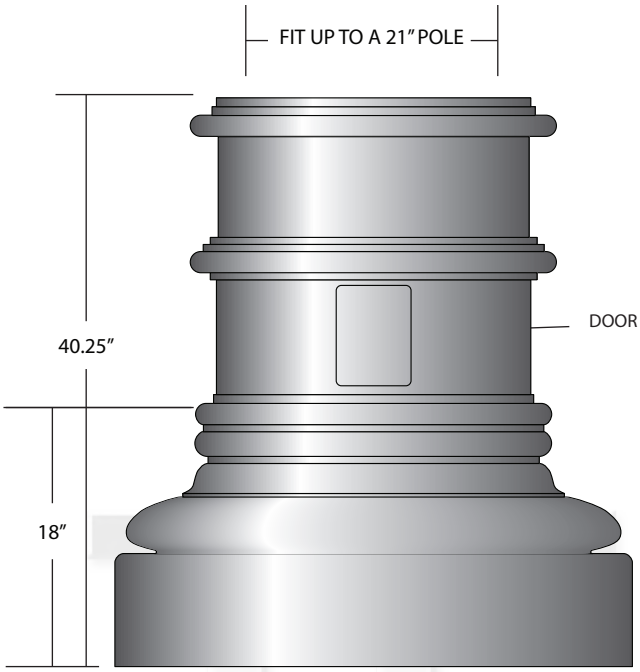

#BCOCR3640-S
OCOCR3640-S
OCEAN
SERIES

36"

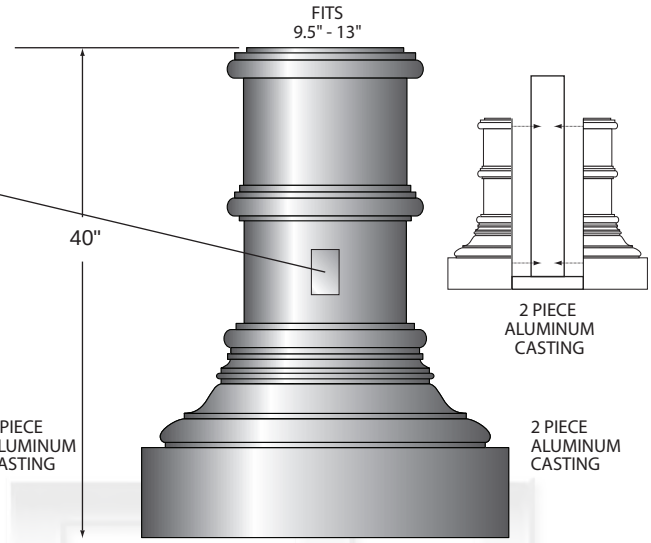

#BCOCR3040-S
OCOCR3040-S
OCEAN
SERIES

30"

OCEAN SMOOTH
OCTAGONAL SERIES

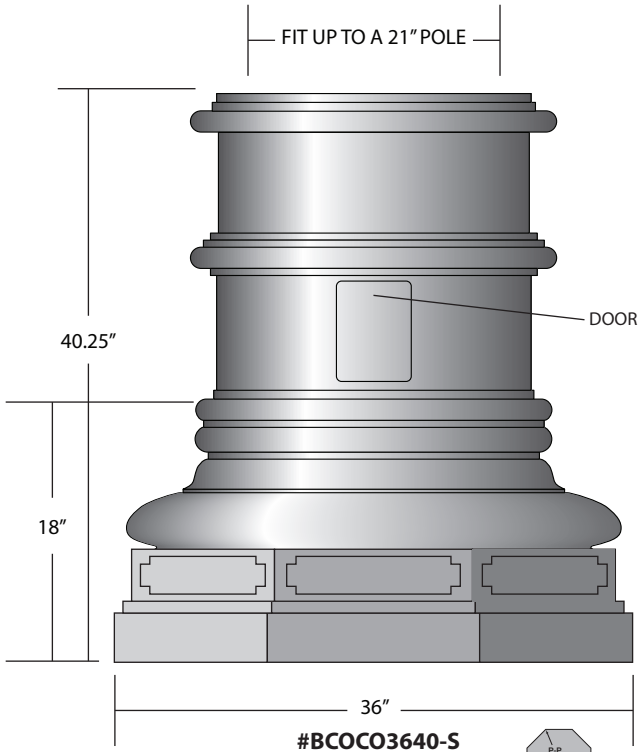

#BCOCO3640-S
OCEAN
OCTAGONAL SERIES

36" FL-FL
40" P-P

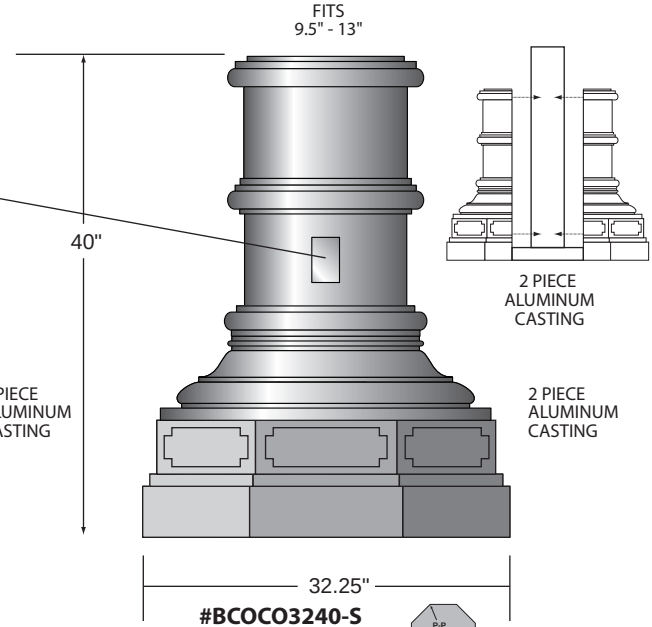

#BCOCO3240-S
OCEAN
OCTAGONAL SERIES

32.25" FL-FL
34.75" P-P

Due to continuing improvement, 1245 Industries, LLC reserves the right to change dimensions, designs, and construction from that which is shown in this brochure.

DELMAR FLUTED
SERIES

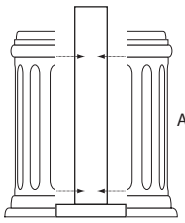

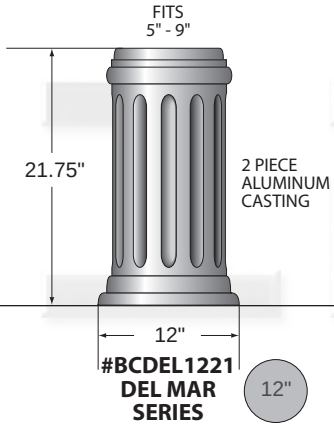

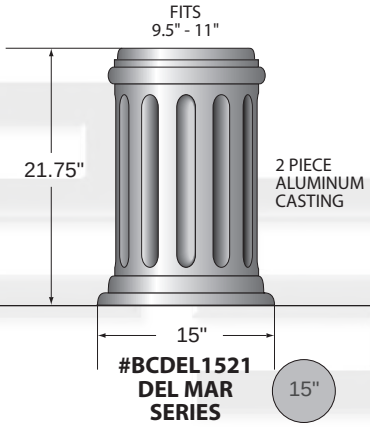

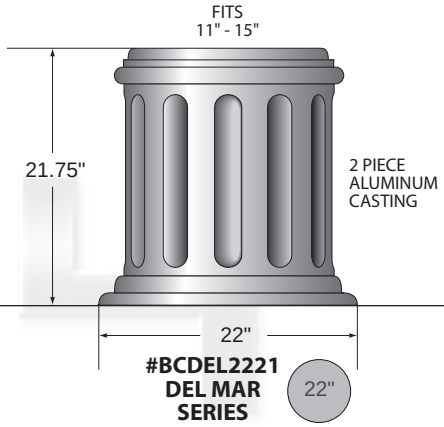

DELMAR SMOOTH
SERIES

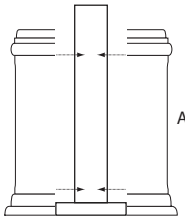

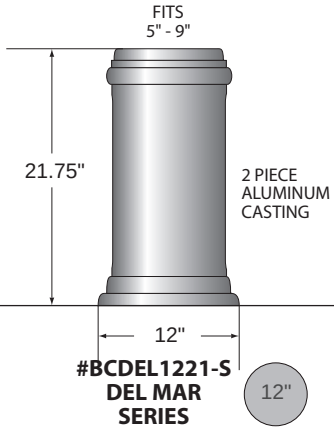

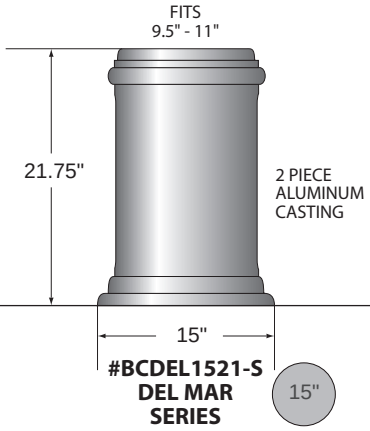

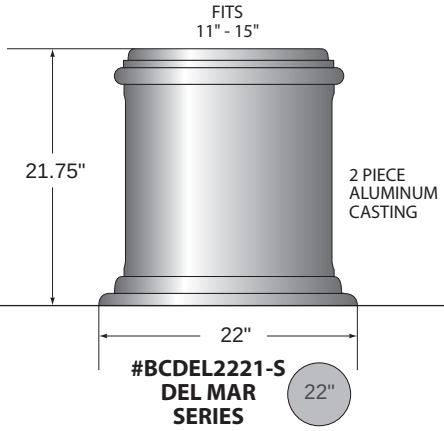

Due to continuing improvement, 1245 Industries, LLC reserves the right to change dimensions, designs, and construction from that which is shown in this brochure.

1254 Industries, LLC, 1444 Alpine Pl, San Marcos CA 92078 • VOICE 760.798.8531 • FAX 760.798.8535
sales@1254industries.com • WWW.1254INDUSTRIES.COM

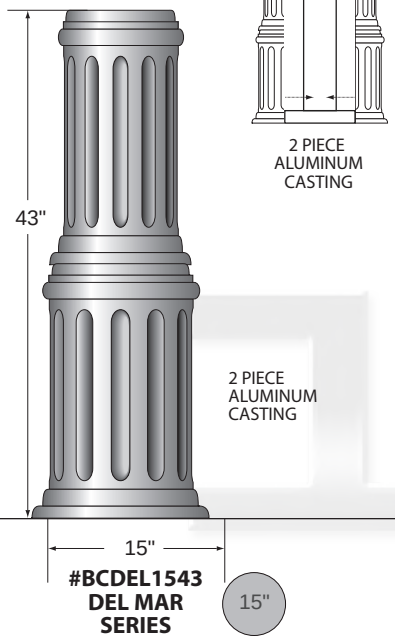

#BCDEL1543
DEL MAR SERIES

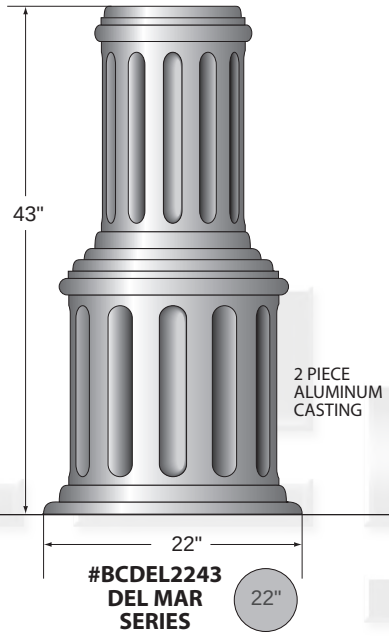

#BCDEL2243
DEL MAR SERIES

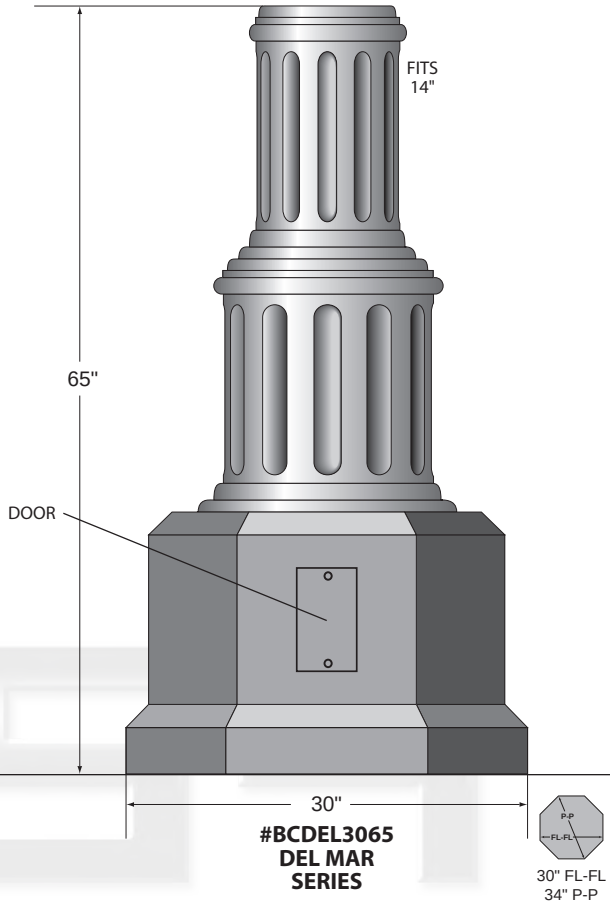

#BCDEL3065
DEL MAR SERIES

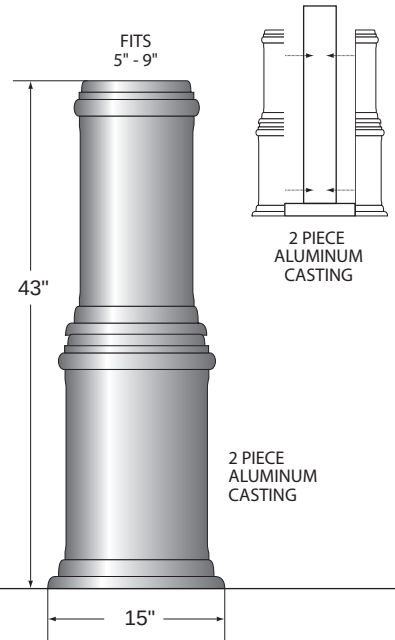

#BCDEL1543-S
DEL MAR SERIES

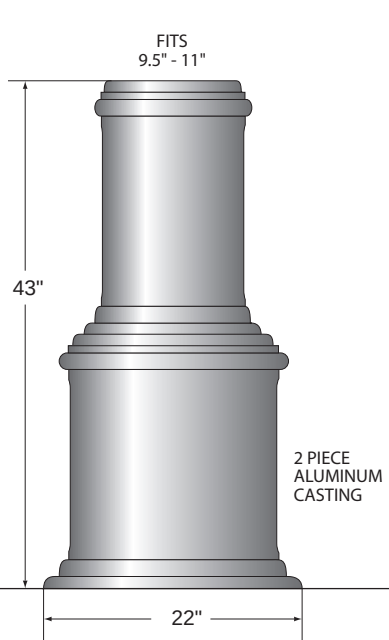

#BCDEL2243-S
DEL MAR SERIES

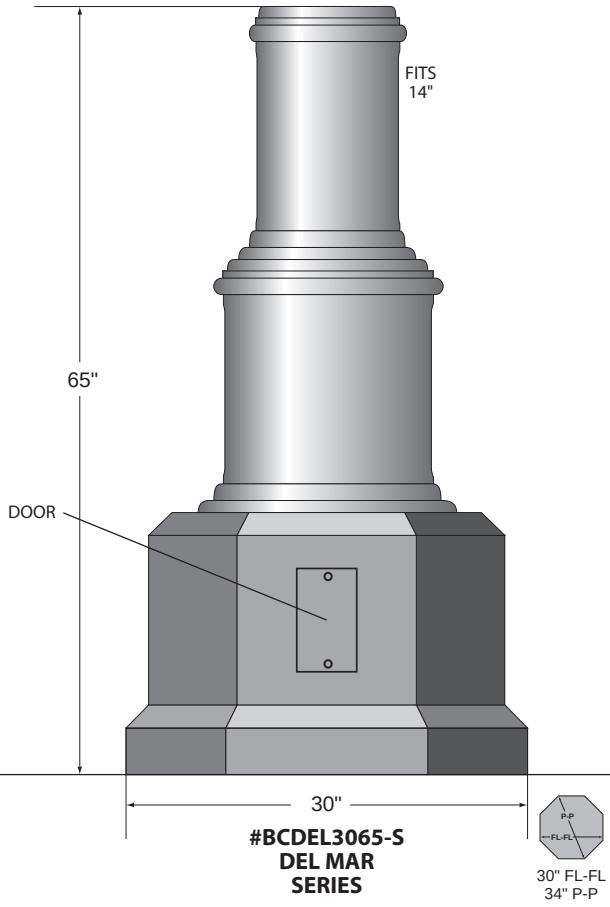

#BCDEL3065-S
DEL MAR SERIES

Due to continuing improvement, 1245 Industries, LLC reserves the right to change dimensions, designs, and construction from that which is shown in this brochure.

JEFFERSON *SERIES*

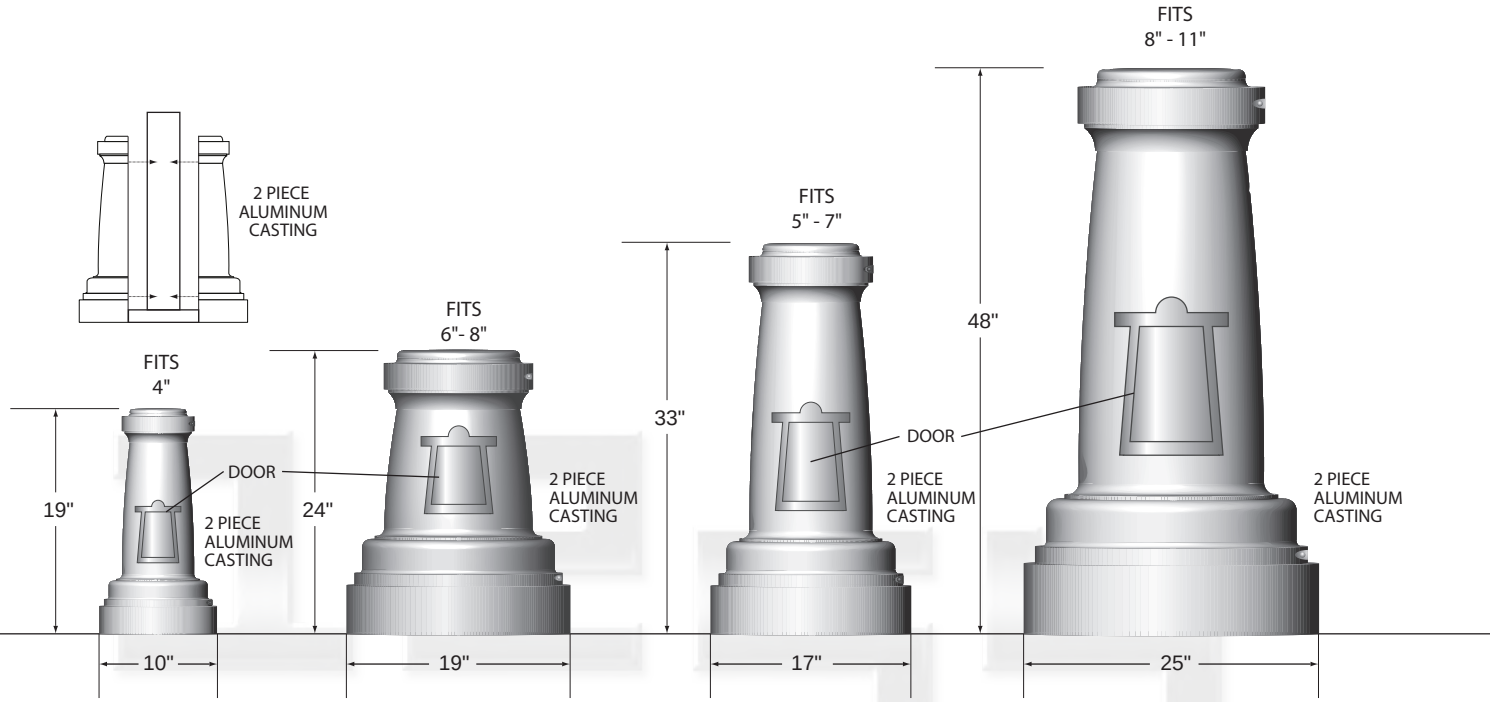

#BCJEF1019 JEFFERSON SERIES 10"

#BCJEF1924 JEFFERSON SERIES 19"

#BCJEF1733 JEFFERSON SERIES 17"

#BCJEF2548 JEFFERSON SERIES 25"

VISTA *SERIES*

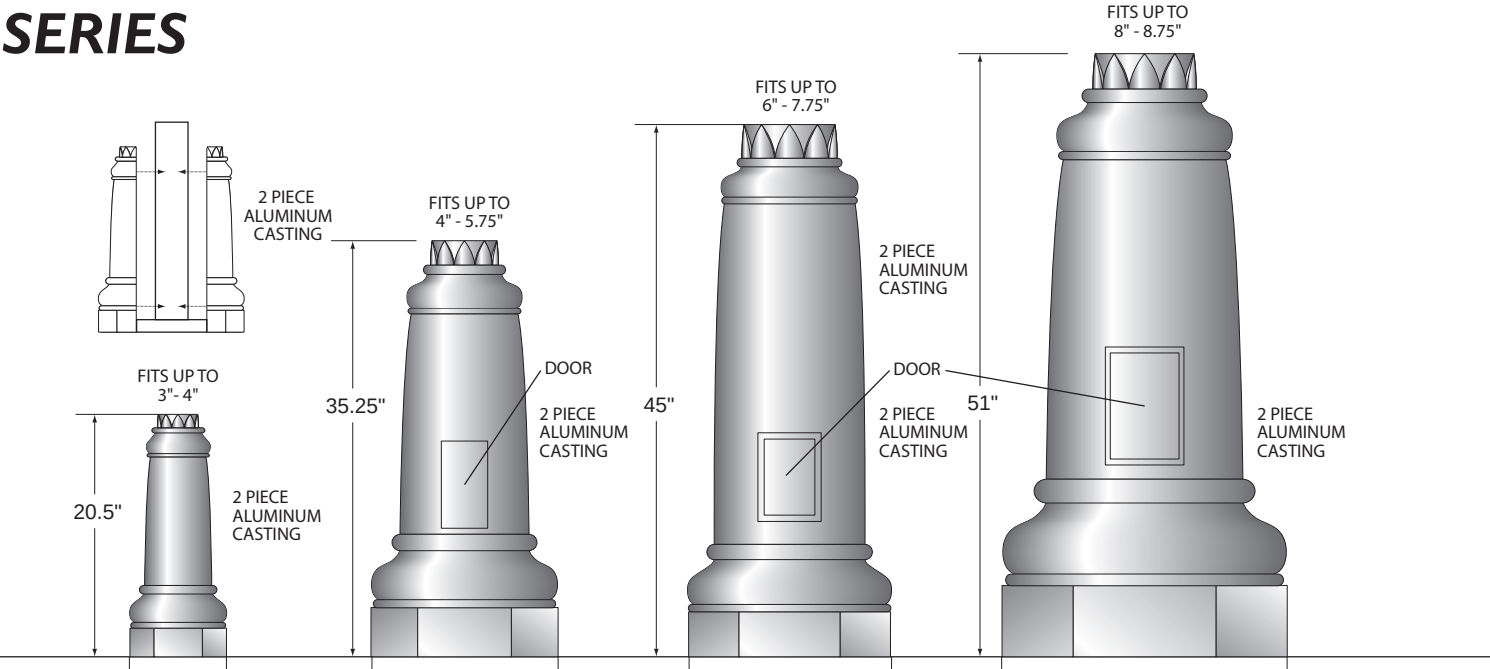

#BCVIS0921 VISTA SERIES 9" FL-FL 9.75" P-P

#BCVIS1735 VISTA SERIES 16.5" FL-FL 17.75" P-P

#BCVIS1845 VISTA SERIES 18.25" FL-FL 19.5" P-P

#BCVIS2451 VISTA SERIES 23.75" FL-FL 25.5" P-P

Due to continuing improvement, 1245 Industries, LLC reserves the right to change dimensions, designs, and construction from that which is shown in this brochure.

1254 Industries, LLC, 1444 Alpine Pl, San Marcos CA 92078 • VOICE 760.798.8531 • FAX 760.798.8535
sales@1254industries.com • WWW.1254INDUSTRIES.COM

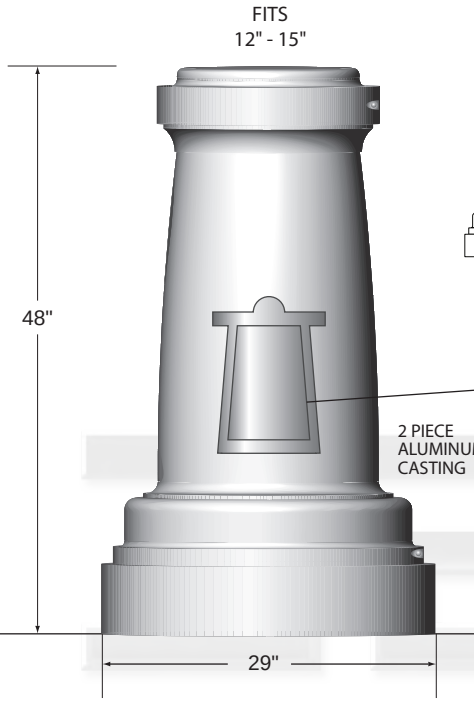

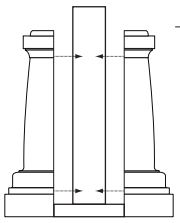

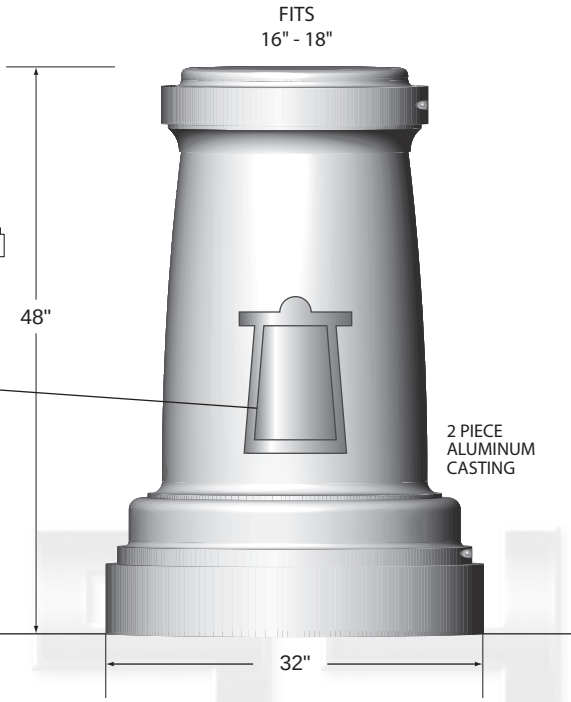

#BCJEF2948 JEFFERSON SERIES 29"

#BCJEF3248 JEFFERSON SERIES 32"

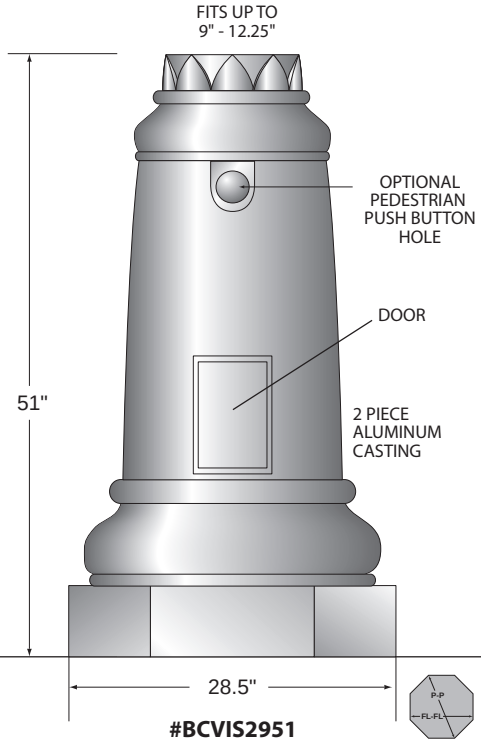

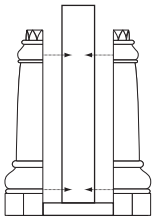

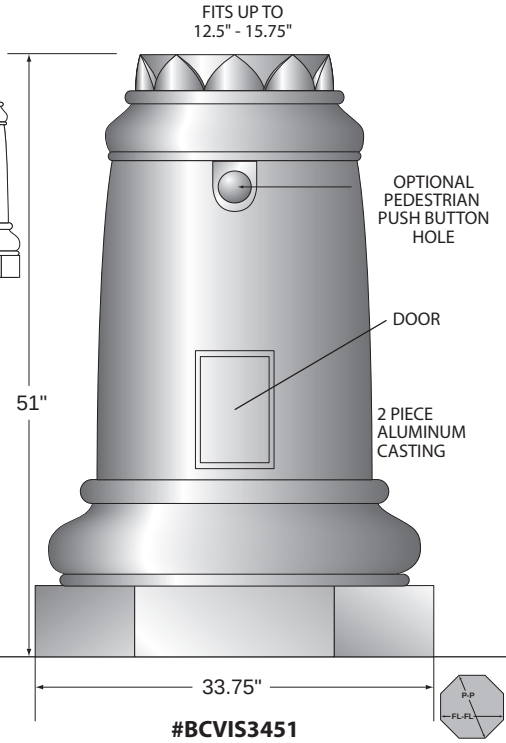

#BCVIS2951 VISTA SERIES

28.5" FL-FL
30.75" P-P

#BCVIS3451 VISTA SERIES

33.75" FL-FL
36" P-P

Due to continuing improvement, 1245 Industries, LLC reserves the right to change dimensions, designs, and construction from that which is shown in this brochure.

SUNSET
SERIES

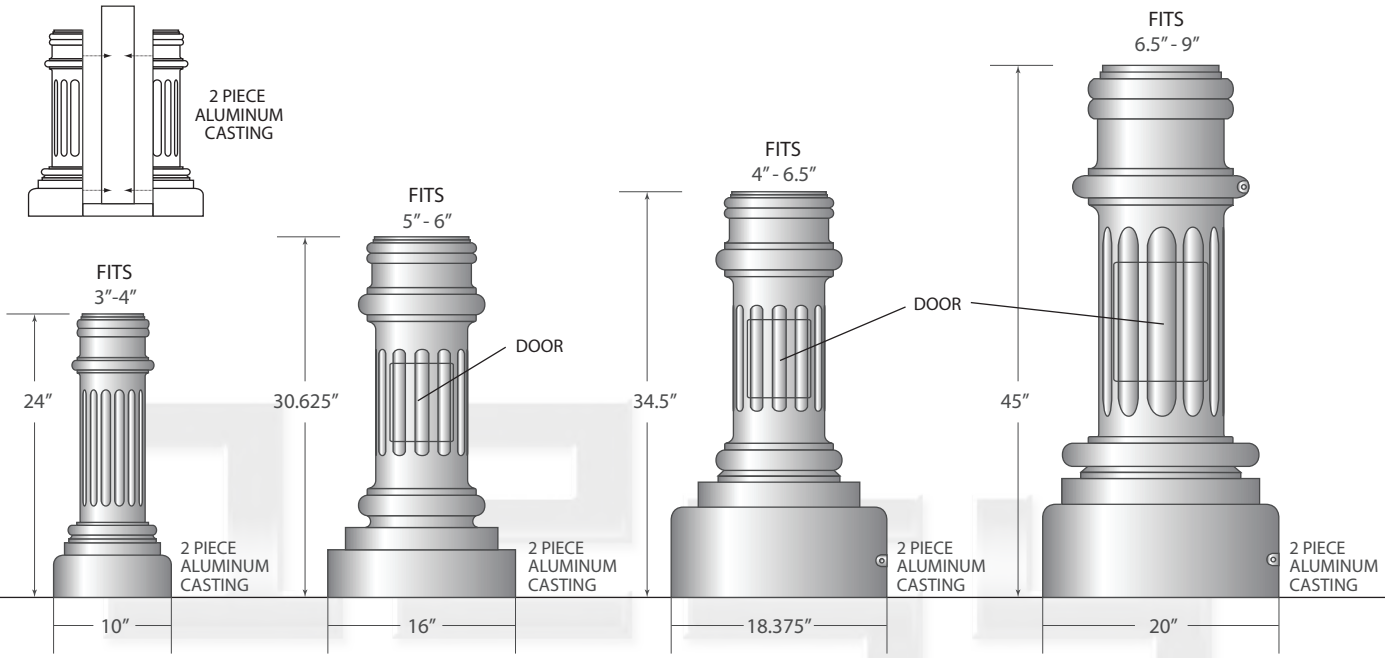

#BCSUN1024 SUNSET SERIES 10"

#BCSUN1630 SUNSET SERIES 16"

#BCSUN1834 SUNSET SERIES 18.375"

#BCSUN2045 SUNSET SERIES 20"

RANCHO FLUTED
SERIES

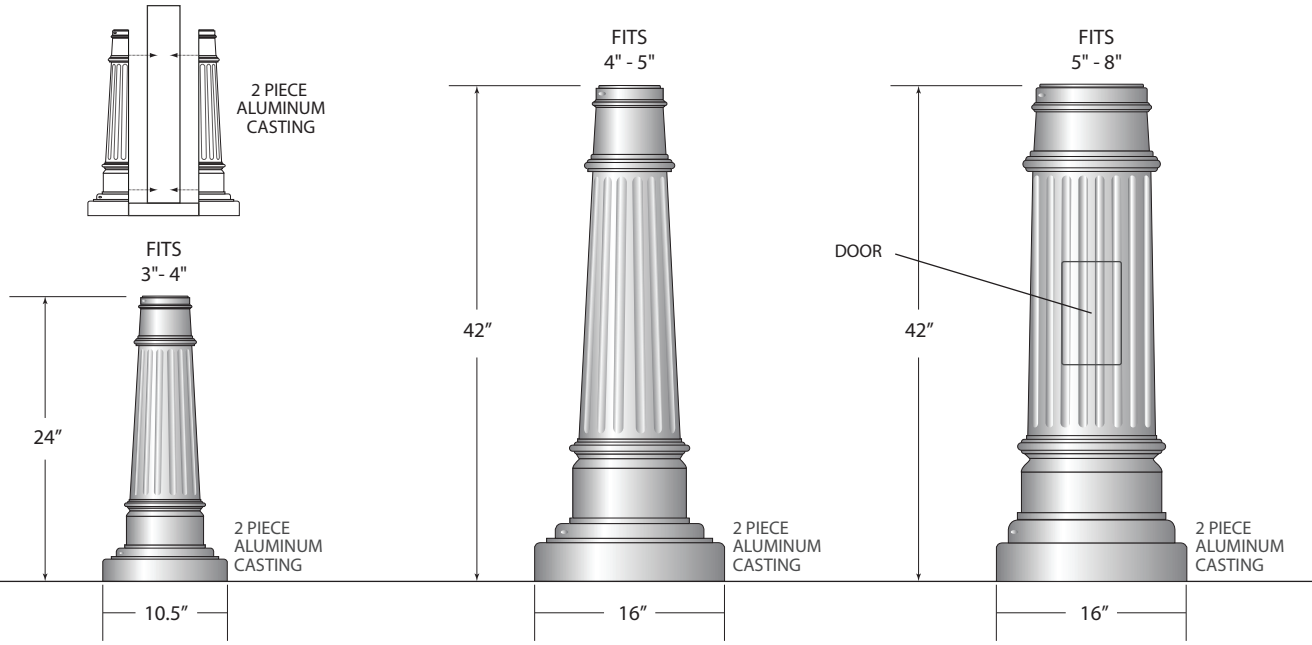

#BCRAN1024-F RANCHO SERIES 10.5"

#BCRAN1642-F RANCHO SERIES 16"

#BCRAN1642 - F RANCHO SERIES 16"

Due to continuing improvement, 1245 Industries, LLC reserves the right to change dimensions, designs, and construction from that which is shown in this brochure.

1254 Industries, LLC, 1444 Alpine Pl, San Marcos CA 92078 • VOICE 760.798.8531 • FAX 760.798.8535
sales@1254industries.com • WWW.1254INDUSTRIES.COM

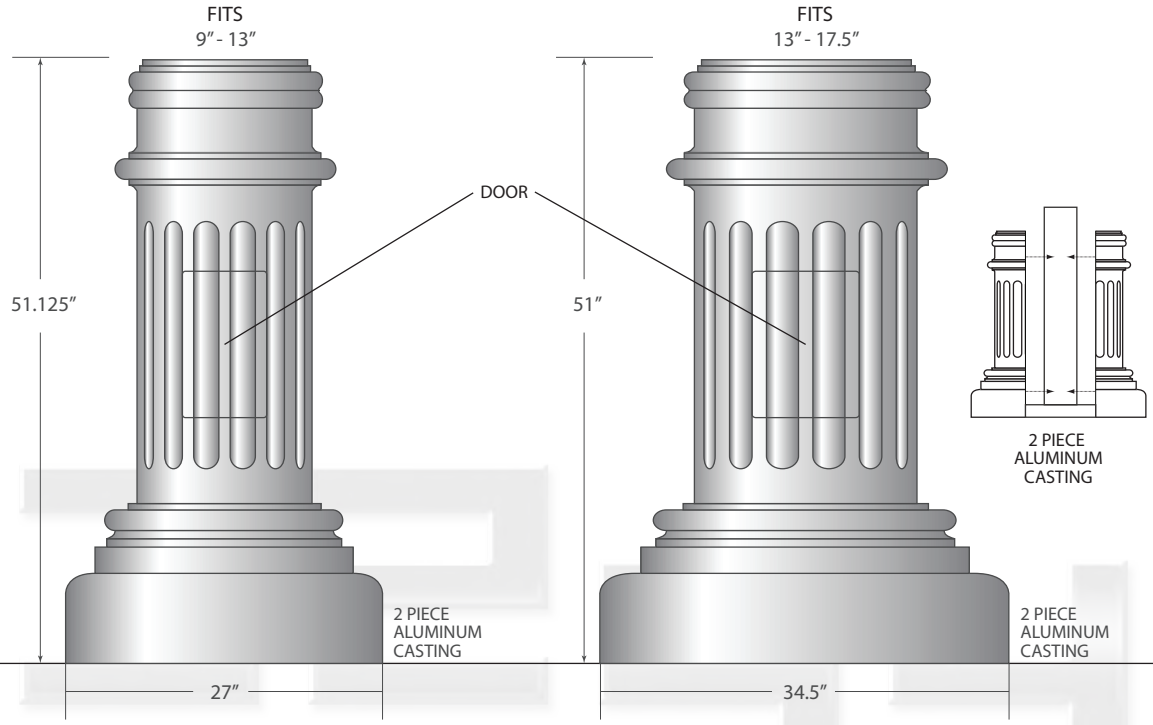

#BCSUN2751 SUNSET SERIES 27"

#BCSUN3451 SUNSET SERIES 34.5"

RANCHO SMOOTH *SERIES*

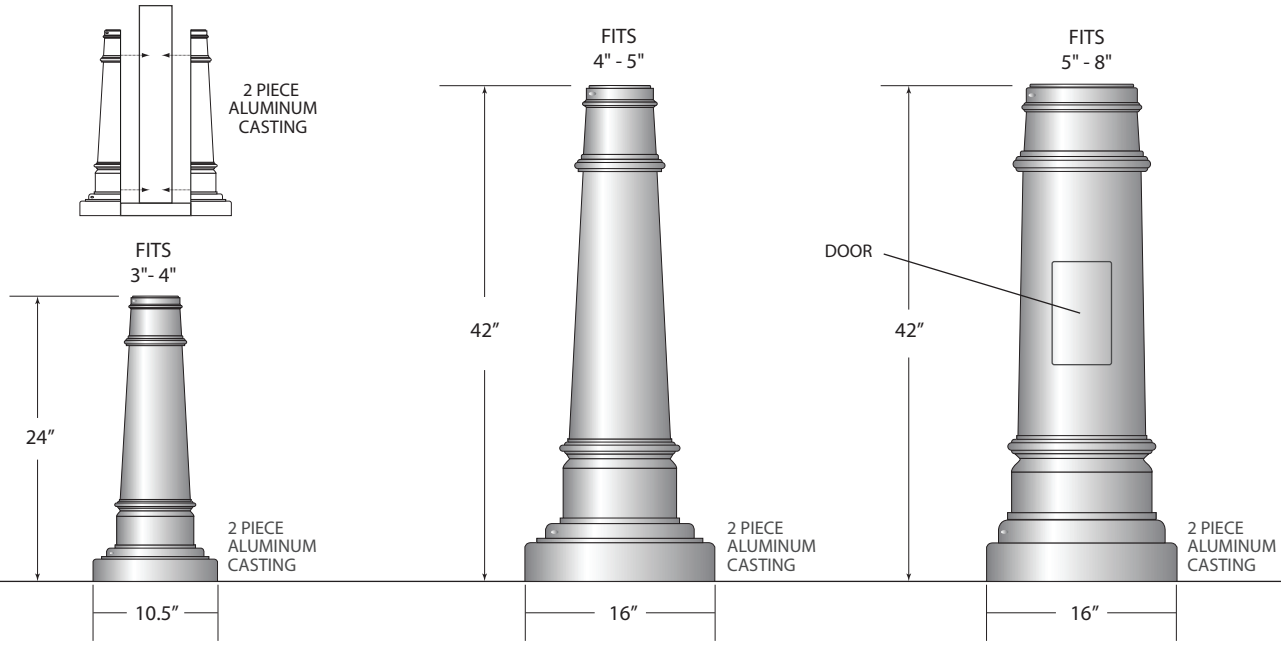

#BCRAS1024 - S RANCHO SERIES 10.5"

#BCRAS1642 - S RANCHO SERIES 16"

#BCRAS1642 - S RANCHO SERIES 16"

Due to continuing improvement, 1245 Industries, LLC reserves the right to change dimensions, designs, and construction from that which is shown in this brochure.

HARBOR ONE-PIECE
SERIES

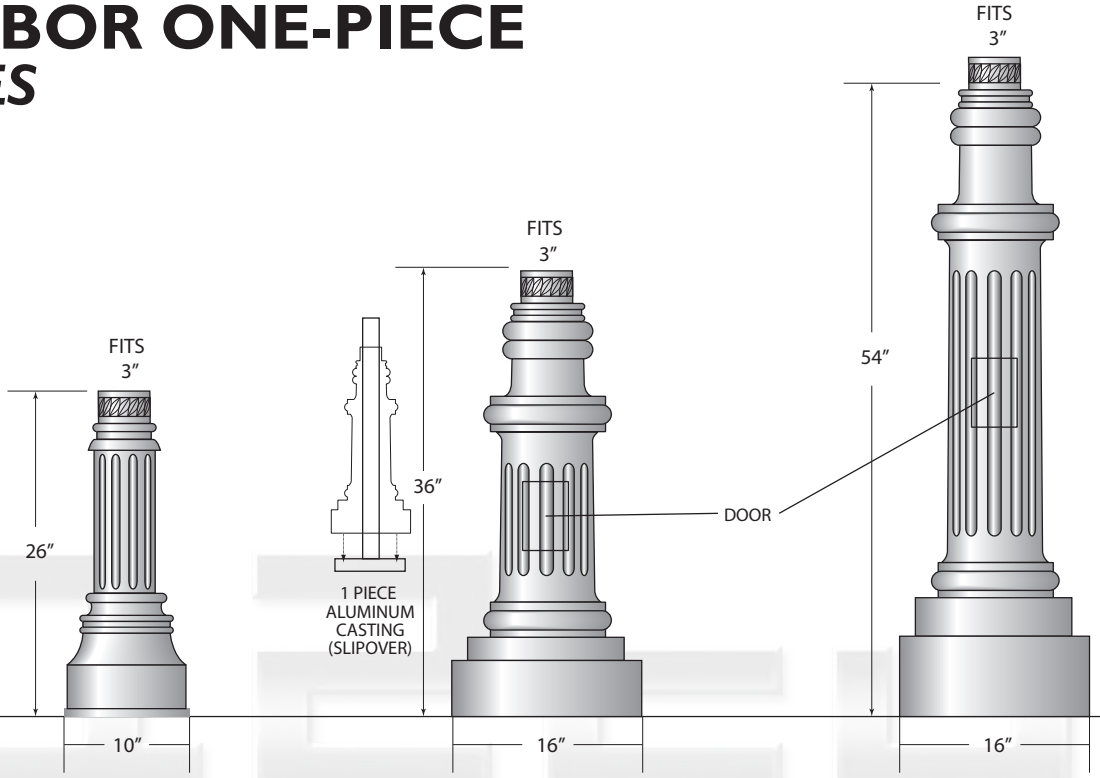

#BCHAR1026 HARBOR SERIES 10"

#BCHAR1636 HARBOR SERIES 16"

#BCHAR1654 HARBOR SERIES 16"

REVERE SMALL & LARGE
SERIES

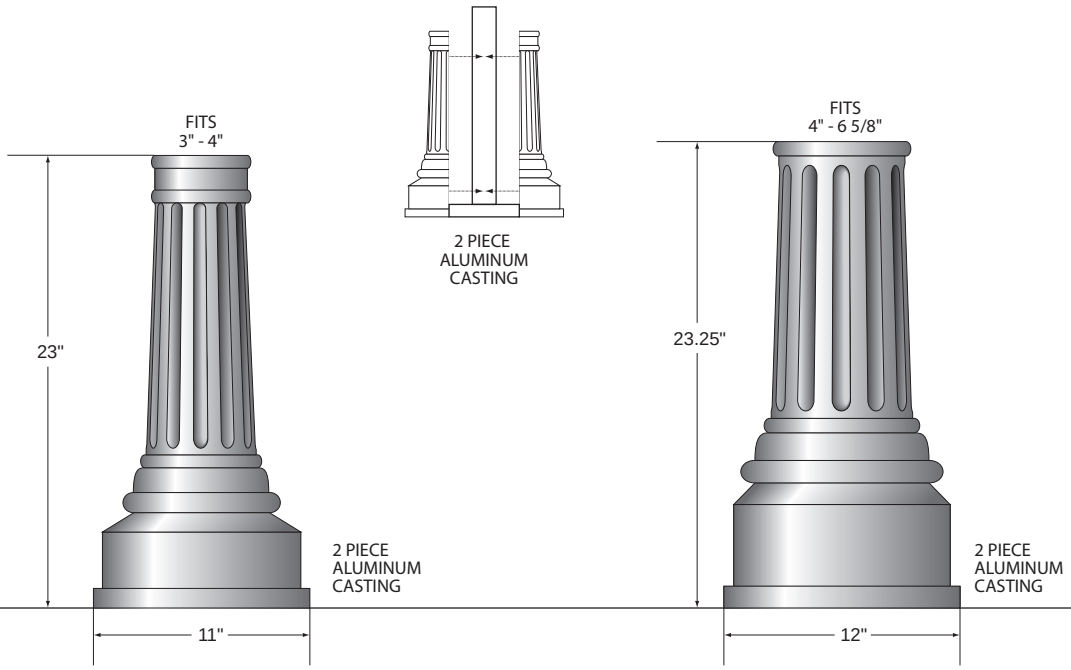

#BCRVS1123 REVERE SMALL 11"

#BCRVL1223 REVERE LARGE 12"

Due to continuing improvement, 1245 Industries, LLC reserves the right to change dimensions, designs, and construction from that which is shown in this brochure.

1254 Industries, LLC, 1444 Alpine Pl, San Marcos CA 92078 • VOICE 760.798.8531 • FAX 760.798.8535
sales@1254industries.com • WWW.1254INDUSTRIES.COM

UNITED *SERIES*

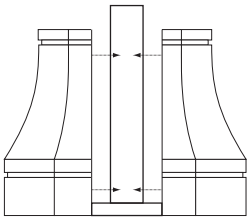

2 PIECE
ALUMINUM
CASTING

FITS
3" - 5"

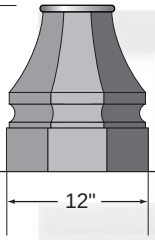

#BCUNO1214
UNITED
SERIES

11.375" FL-FL
12.375" P-P

FITS
up to 8"

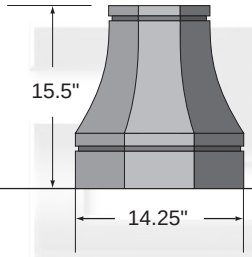

2 PIECE
ALUMINUM
CASTING

#BCUNO1415
UNITED
SERIES

14.25" FL-FL
15" P-P

FITS
15"

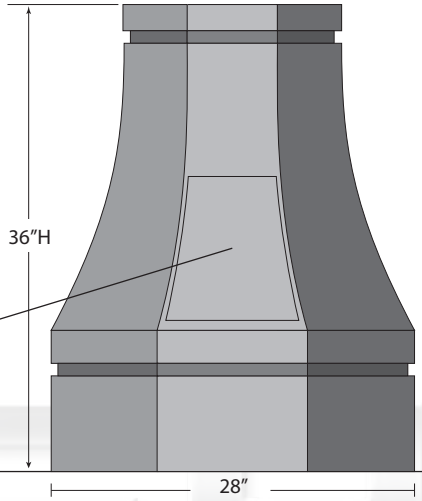

2 PIECE
ALUMINUM
CASTING

#BCUNO2836
UNITED
SERIES

28" FL-FL
30" P-P

MARQUEZ *SERIES*

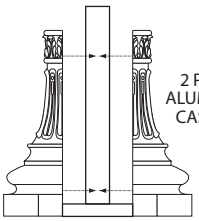

2 PIECE
ALUMINUM
CASTING

FITS
3" - 4"

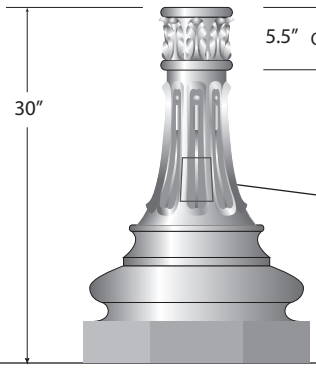

#BCMAR1930
MARQUEZ
SERIES

19" FL-FL
20.75" P-P

FITS
7" - 10.5"

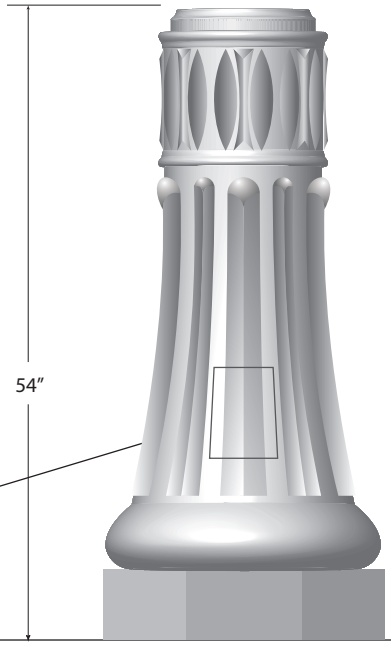

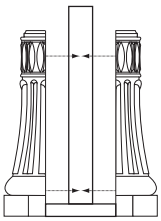

2 PIECE
ALUMINUM
CASTING

#BCMAR2454
MARQUEZ
SERIES

24" FL-FL
28" P-P

Due to continuing improvement, 1245 Industries, LLC reserves the right to change dimensions, designs, and construction from that which is shown in this brochure.

MONTREAL
SERIES

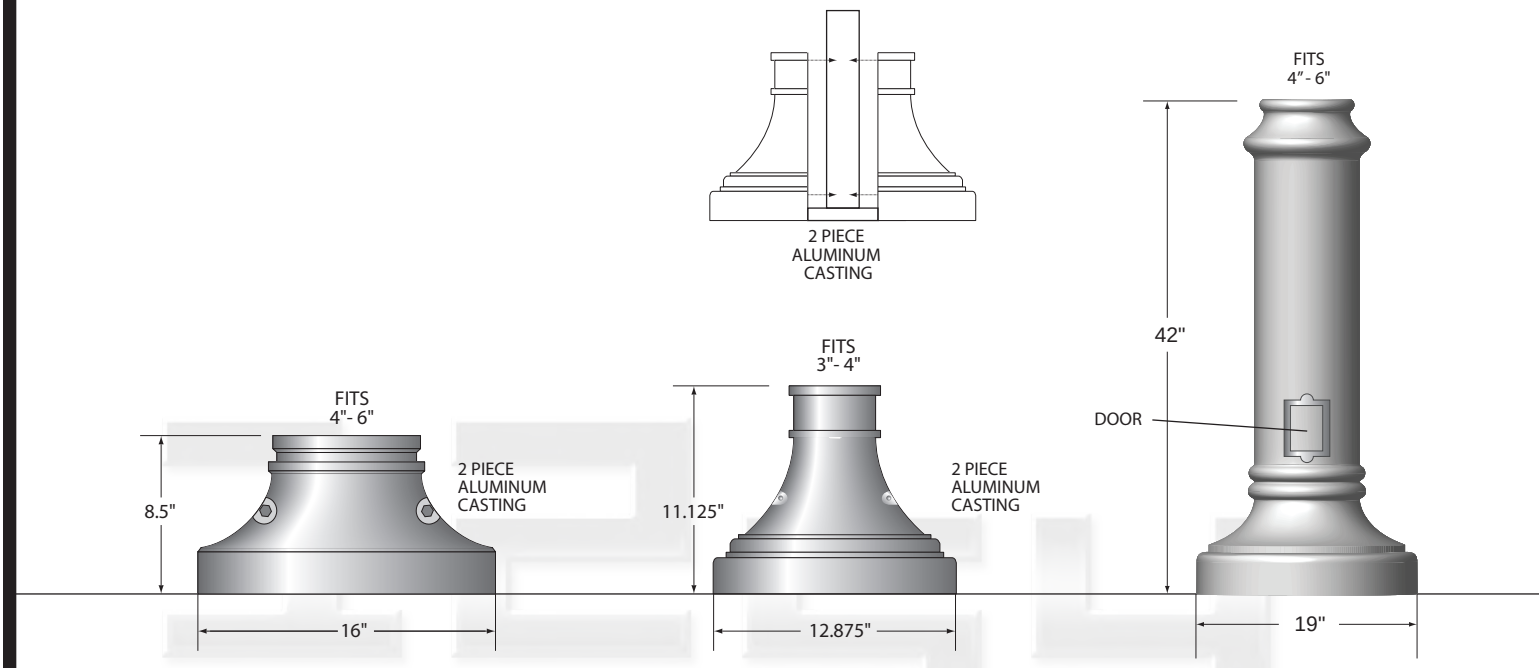

#BCMON168 MONTREAL 16"

#BCMON1211 MONTREAL 12.875"

#BCMON1942 MONTREAL 19"

CAST SQUARE
BASES

RICHMOND
BASE COVER

ATHENA
ONE-PIECE BASE

CAPITAL
ONE-PIECE BASE

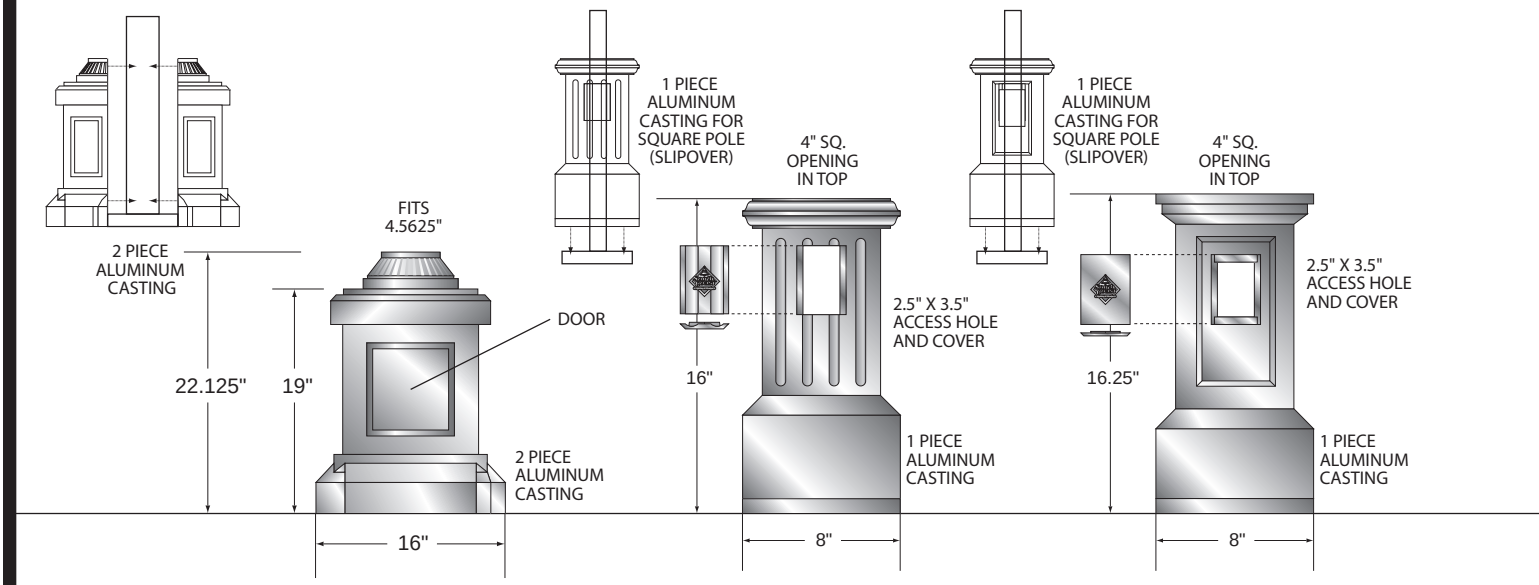

#BCRCH1619 RICHMOND 16"

#BCATH816 ATHENA 8"

#BCCAP816 CAPITAL 8"

Due to continuing improvement, 1245 Industries, LLC reserves the right to change dimensions, designs, and construction from that which is shown in this brochure.

1254 Industries, LLC, 1444 Alpine Pl, San Marcos CA 92078 • VOICE 760.798.8531 • FAX 760.798.8535
sales@1254industries.com • WWW.1254INDUSTRIES.COM

TUNDRA *BASE*

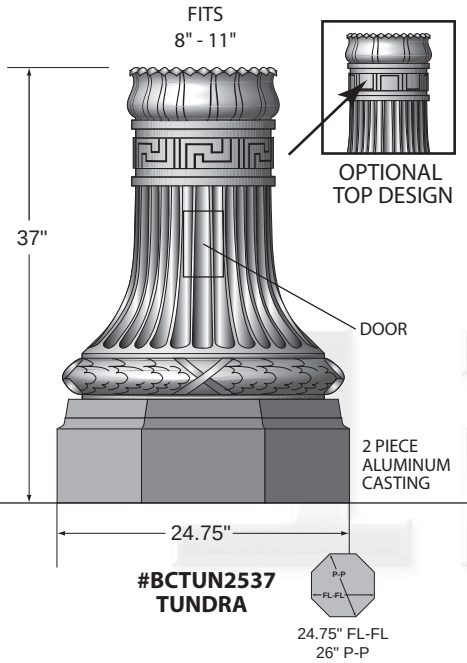

#BCTUN2537
TUNDRA

24.75" FL-FL
26" P-P

BROADWAY *BASE*

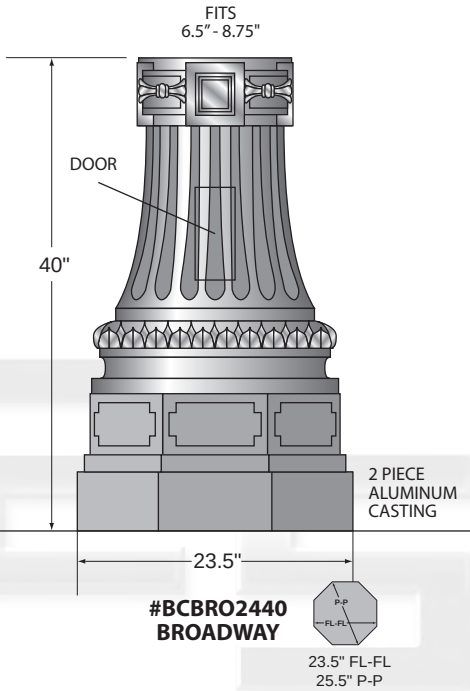

#BCBRO2440
BROADWAY

23.5" FL-FL
25.5" P-P

HAMILTON *BASE*

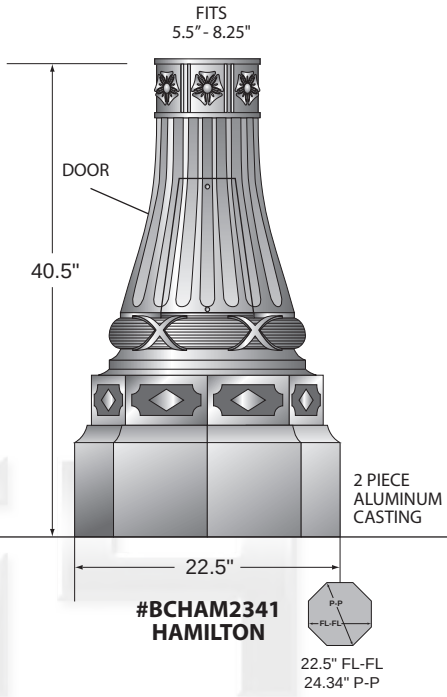

#BCHAM2341
HAMILTON

22.5" FL-FL
24.34" P-P

WELLINGTON *SERIES*

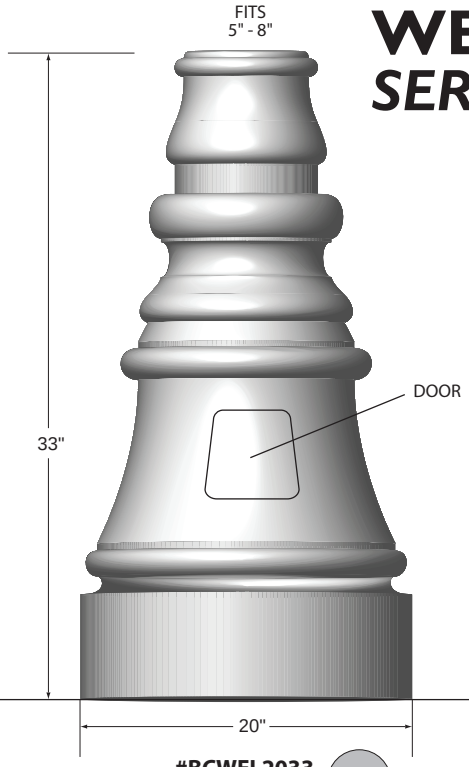

#BCWEL2033
WELLINGTON

20"

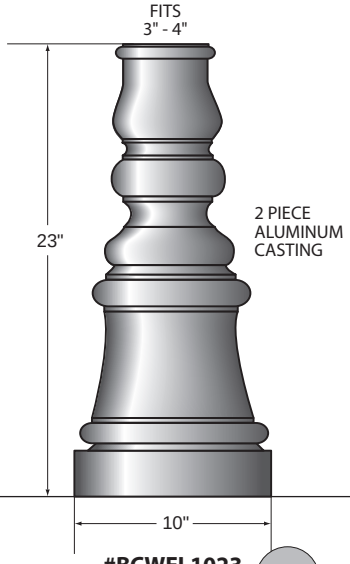

#BCWEL1023
WELLINGTON

10"

SUMMER *BASE*

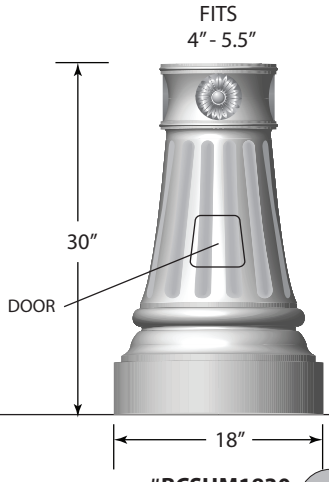

#BCSUM1830
SUMMER

18"

Due to continuing improvement, 1245 Industries, LLC reserves the right to change dimensions, designs, and construction from that which is shown in this brochure.

FLORENCE *SERIES*

SPRING *SERIES*

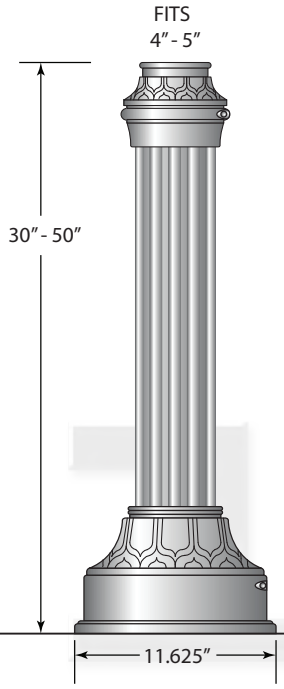

#BCFLO1150 FLORENCE SERIES

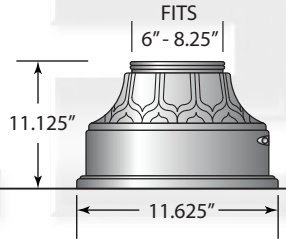

#BCFLO1111 FLORENCE SERIES

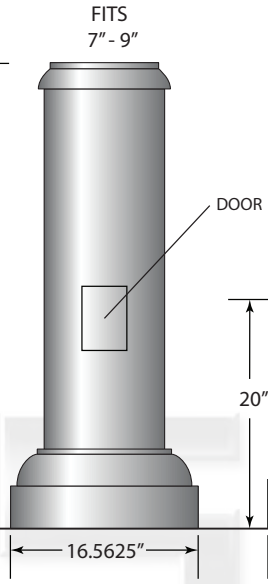

#BCSPR1741 SPRING SERIES

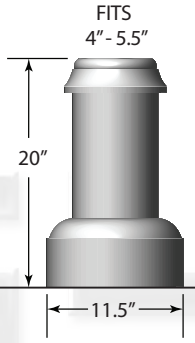

#BCSPR1120 SPRING SERIES

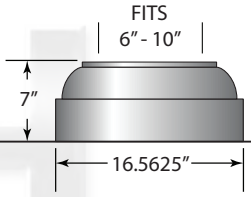

#BCSPR1707 SPRING SERIES

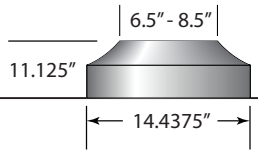

 # BC1 - 88

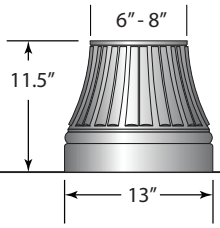

 # BC225

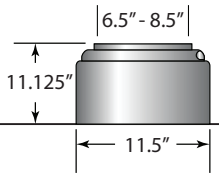

 # BC205

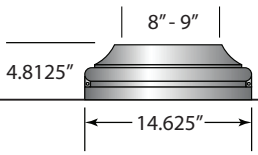

 # BC1 - 8

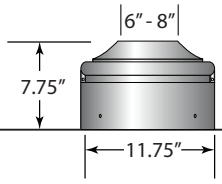

 # BC1 - MOD

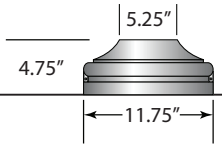

 # BC1 - 4

Due to continuing improvement, 1245 Industries, LLC reserves the right to change dimensions, designs, and construction from that which is shown in this brochure.

1254 Industries, LLC, 1444 Alpine Pl, San Marcos CA 92078 • VOICE 760.798.8531 • FAX 760.798.8535
sales@1254industries.com • WWW.1254INDUSTRIES.COM

OTHER CUSTOM *BASES*

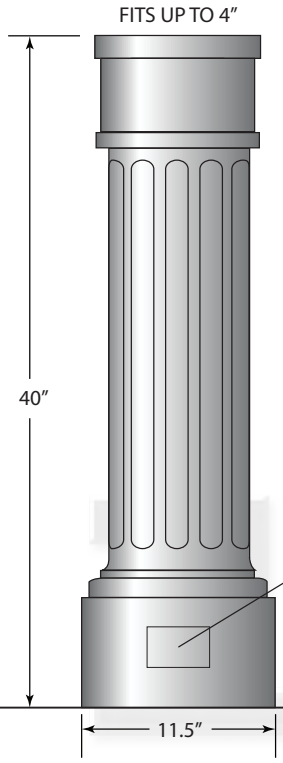

#BCBOL205-1240

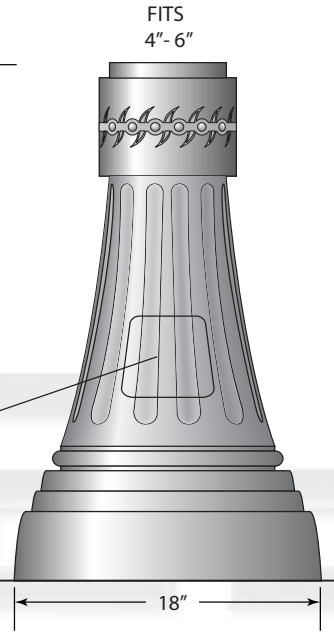

#BCBER1830
BERKSHIRE

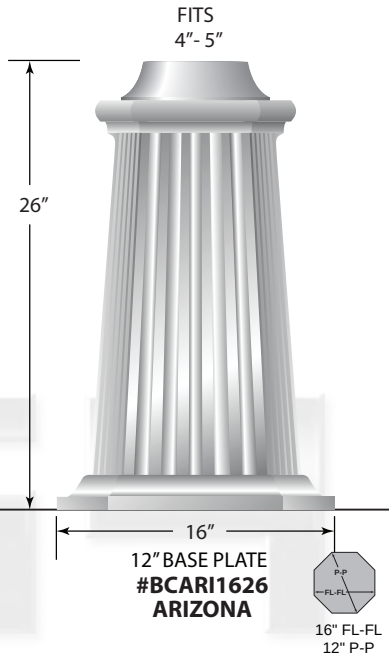

12″ BASE PLATE
#BCARI1626
ARIZONA

16" FL-FL
12" P-P

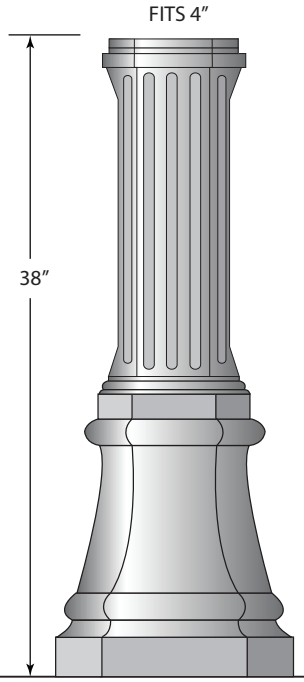

#BCBOL405-1438

14.25" FL-FL
15.5" P-P

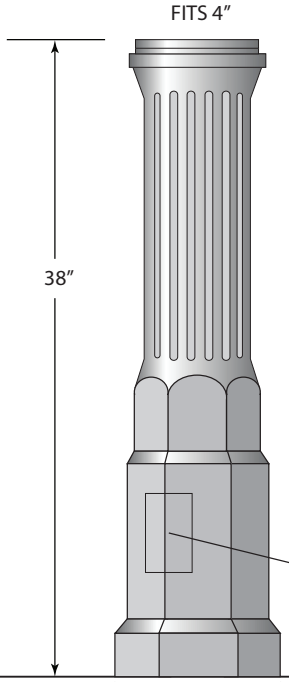

#BCBOL505-1038

10" FL-FL
11" P-P

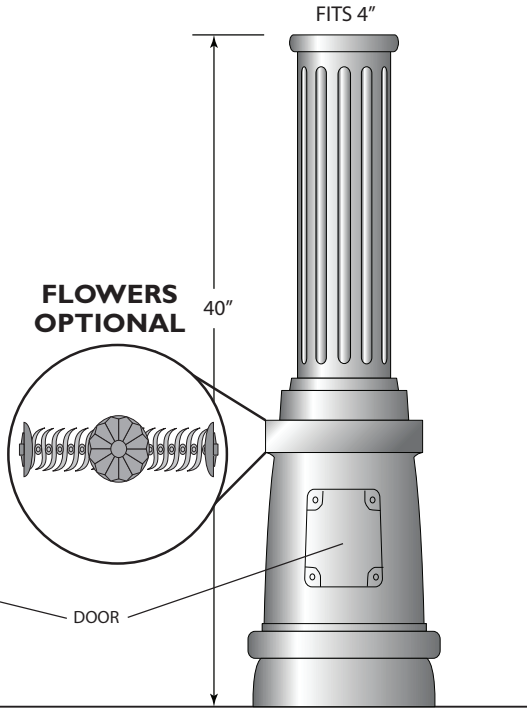

#BCBOL805-1140

Due to continuing improvement, 1245 Industries, LLC reserves the right to change dimensions, designs, and construction from that which is shown in this brochure.

ONE PIECE STRUCTURAL
BASES

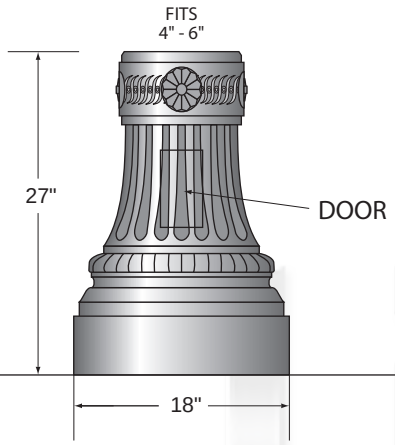

#SBCHUN1827
HUNTINGTON
ROUND SERIES

18"

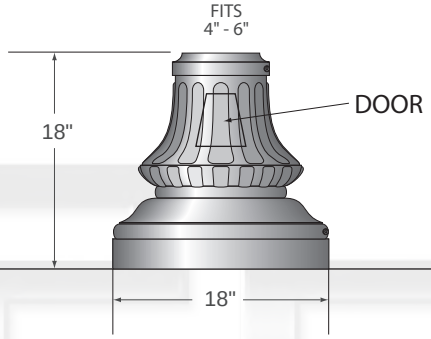

#SBCWAR1818
WASHINGTON
ROUND SERIES

18"

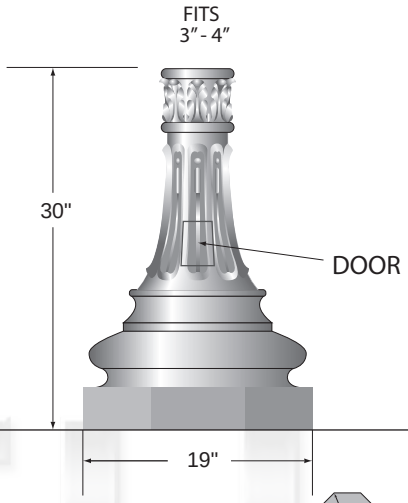

#SBCMAR1930
MARQUEZ
SERIES

19" FL-FL
20.75" P-P

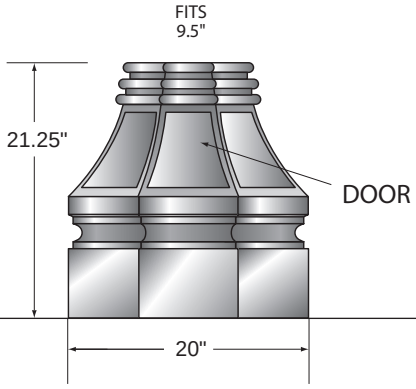

#SBCPRO2021
PROMENADE
SERIES

20" FL-FL
21.5" P-P

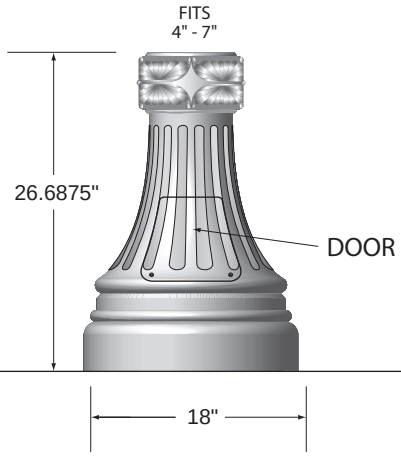

#SBCALO1827
ALOHA
SERIES

18"

Due to continuing improvement, 1245 Industries, LLC reserves the right to change dimensions, designs, and construction from that which is shown in this brochure.

1254 Industries, LLC, 1444 Alpine Pl, San Marcos CA 92078 • VOICE 760.798.8531 • FAX 760.798.8535
sales@1254industries.com • WWW.1254INDUSTRIES.COM

CA = CAST ARM

CAST *ARMS*

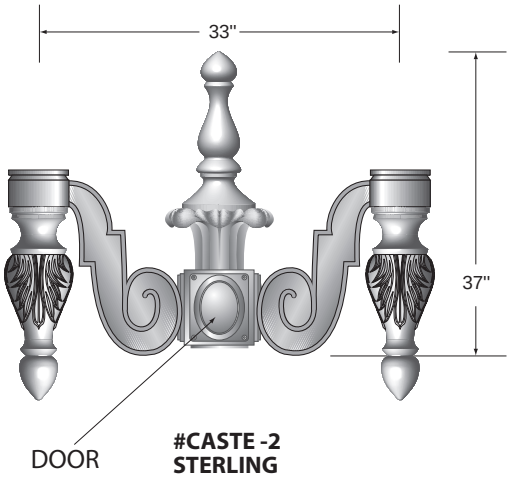

#CASTE -2
STERLING

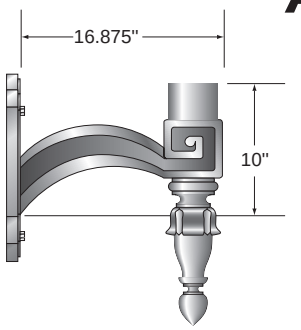

#CATER -1
TERRACE

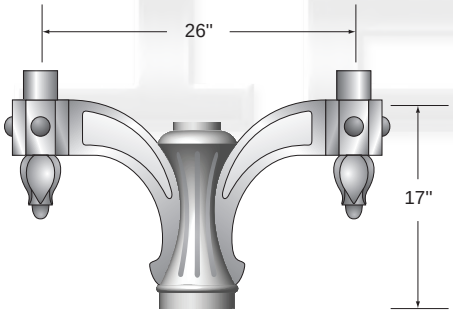

#CATRI - 2
TRILOGY

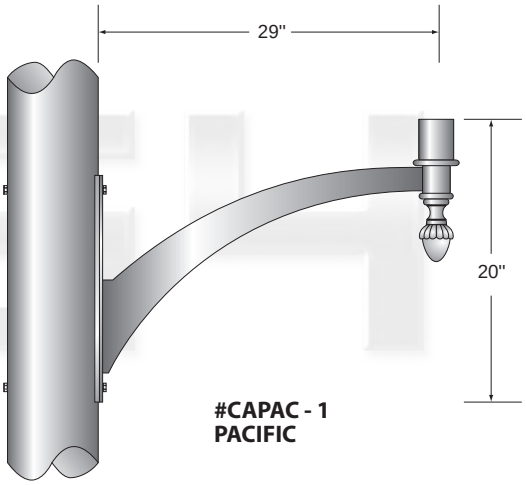

#CAPAC - 1
PACIFIC

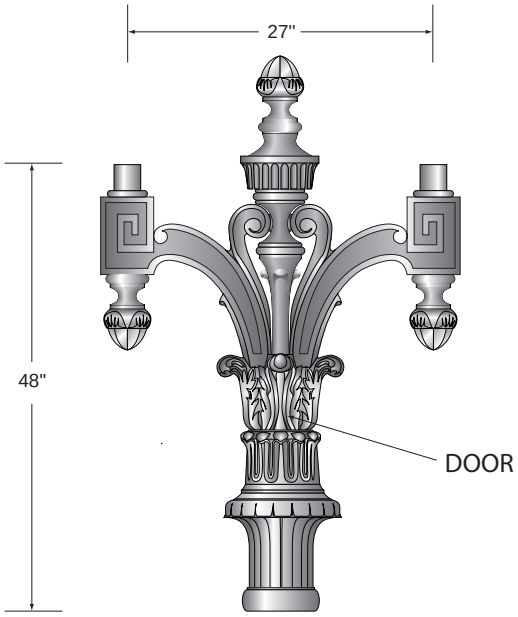

#CAVIC - 2
VICTORIAN

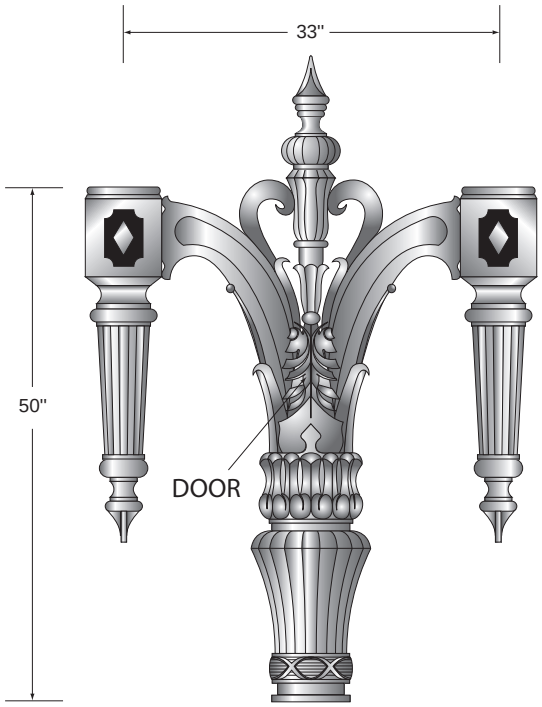

#CAHAM - 2
HAMILTON

Due to continuing improvement, 1245 Industries, LLC reserves the right to change dimensions, designs, and construction from that which is shown in this brochure.

SINGLE *ARMS*

ALHAMBRA

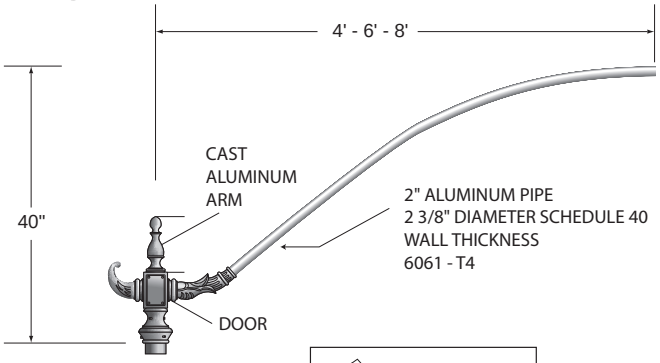

#ALH - 1 - 468 ALHAMBRA SERIES

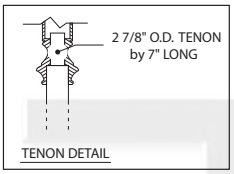

PARAMOUNT

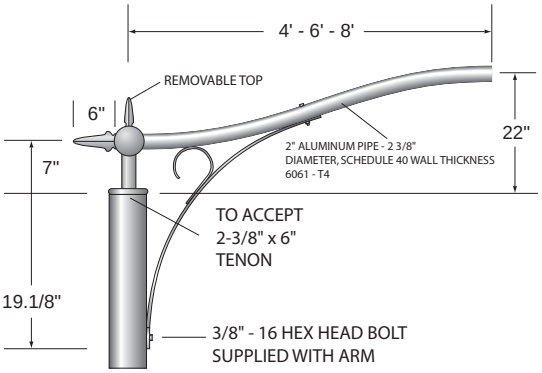

#PAR - 1 - 468 PARAMOUNT SERIES

PAVILION

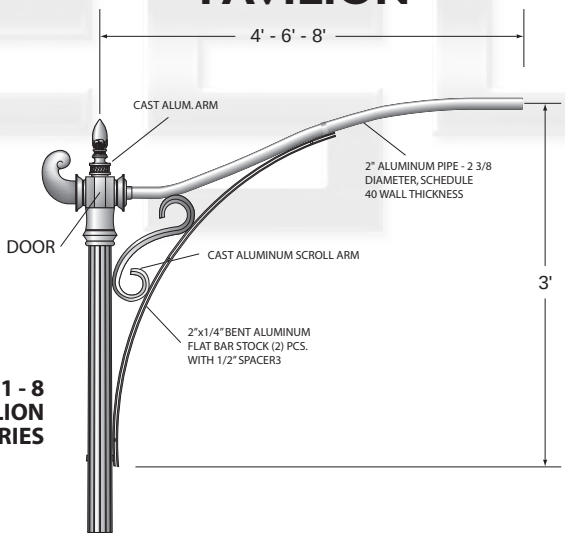

#PAV - 1 - 8 PAVILION SERIES

MISSION

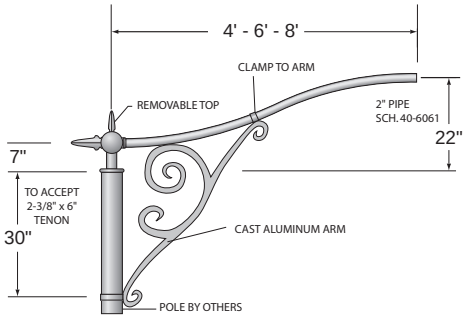

#MIS - 1 - 468 MISSION SERIES

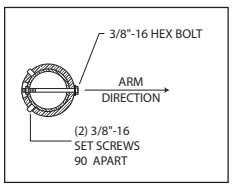

CASCADE

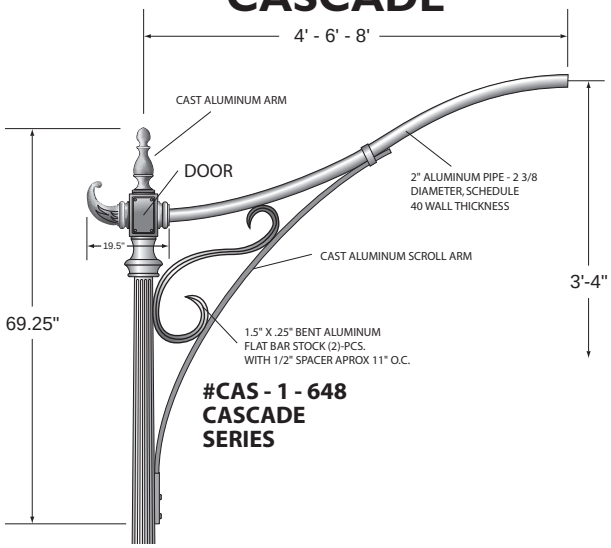

#CAS - 1 - 648 CASCADE SERIES

Due to continuing improvement, 1245 Industries, LLC reserves the right to change dimensions, desi[illegible] at which is shown in this brochure.

1254 Industries, LLC, 1444 Alpine Pl, San Marcos CA 92078 • VOICE 760.798.8531 • FAX 760.798.8535
sales@1254industries.com • WWW.1254INDUSTRIES.COM

TWIN *ARMS*

ALHAMBRA

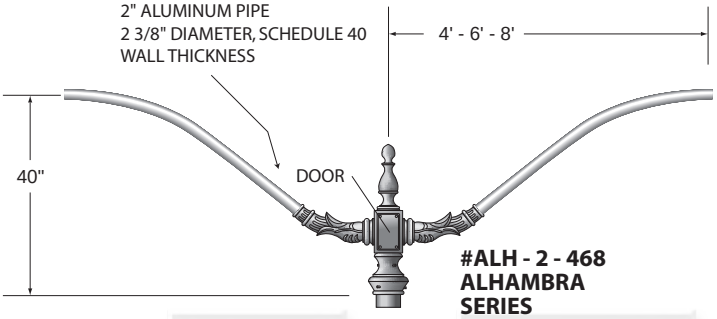

#ALH - 2 - 468
ALHAMBRA
SERIES

PARAMOUNT

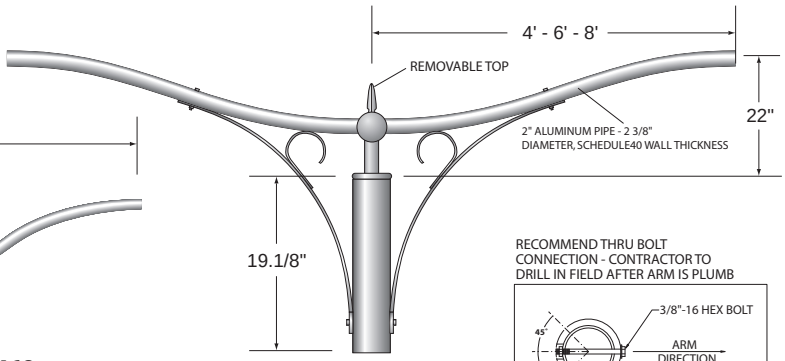

#PAR - 2 - 468
PARAMOUNT
SERIES

RECOMMEND THRU BOLT CONNECTION - CONTRACTOR TO DRILL IN FIELD AFTER ARM IS PLUMB

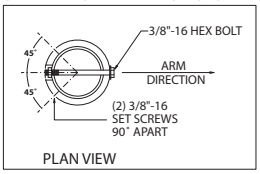

PAVILION

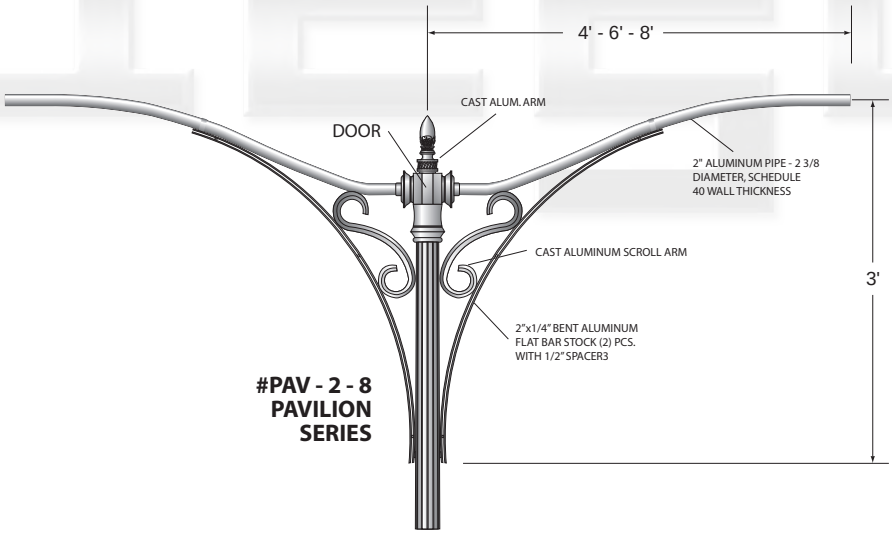

#PAV - 2 - 8
PAVILION
SERIES

MISSION

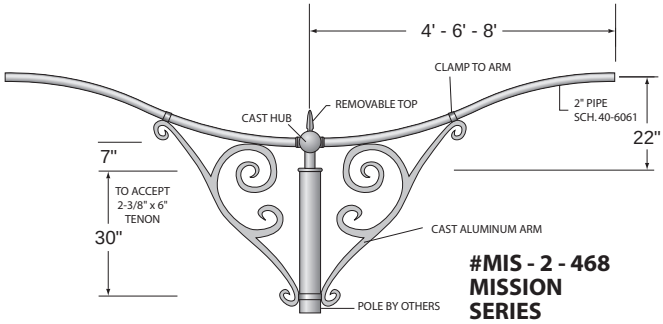

#MIS - 2 - 468
MISSION
SERIES

CASCADE

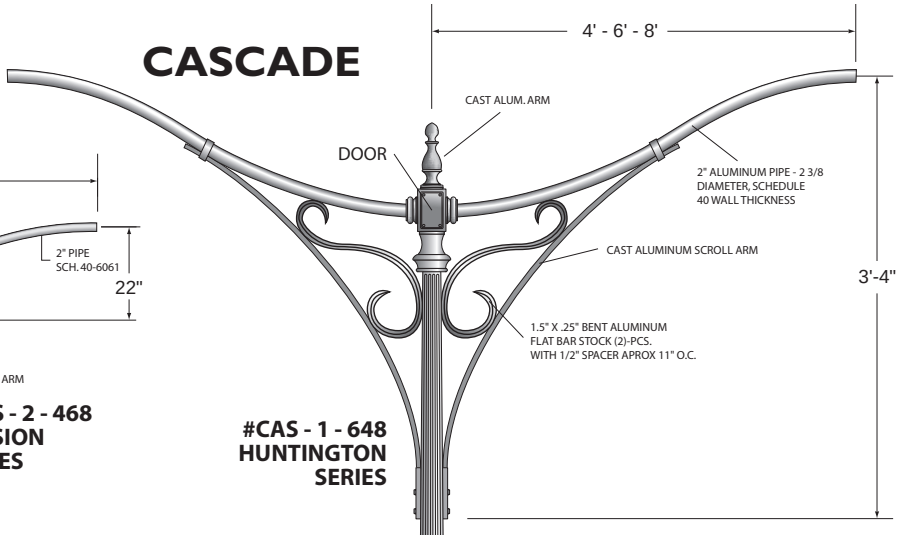

#CAS - 1 - 648
HUNTINGTON
SERIES

Due to continuing improvement, 1245 Industries, LLC reserves the right to change dimensions, designs, and construction from that which is shown in this brochure.

SCROLLS

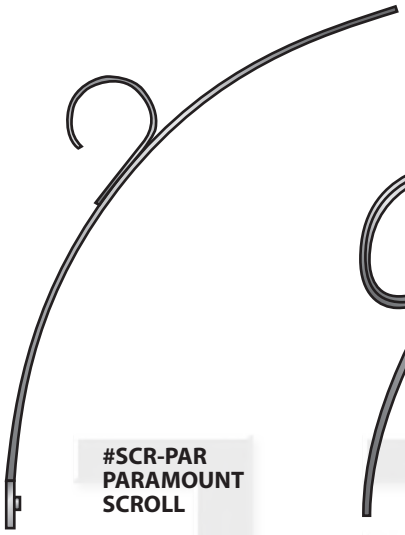

#SCR-PAR
PARAMOUNT
SCROLL

#SCR-CAS
CASCADE
SCROLL

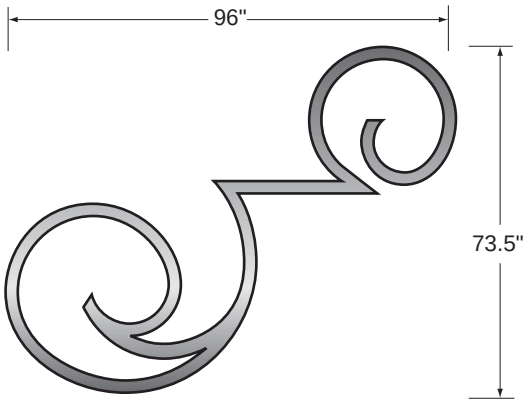

 # SCR-VIS7496
LARGE VISTA SCROLL

#SCR-MIS
MISSION
SCROLL

#SCR-S
"S"
SCROLL

 # SCR-VIS3040
VISTA SCROLL

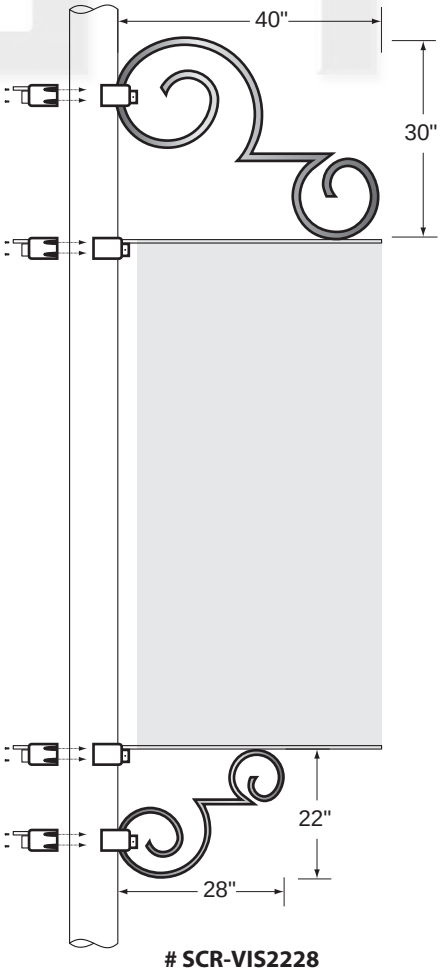

 # SCR-VIS2228
VISTA SCROLL

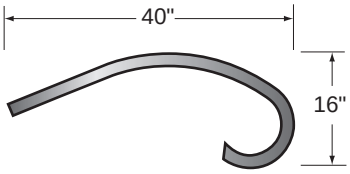

 # SCR-VIS1640
VISTA SCROLL

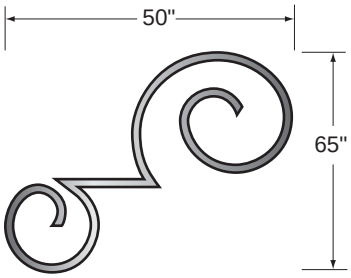

 # SCR-VIS5065
VISTA SCROLL

Due to continuing improvement, 1245 Industries, LLC reserves the right to change dimensions, designs, and construction from that which is shown in this brochure.

1254 Industries, LLC, 1444 Alpine Pl, San Marcos CA 92078 • VOICE 760.798.8531 • FAX 760.798.8535
sales@1254industries.com • WWW.1254INDUSTRIES.COM

CLAMP ON 2 - PIECE ALHAMBRA ARM

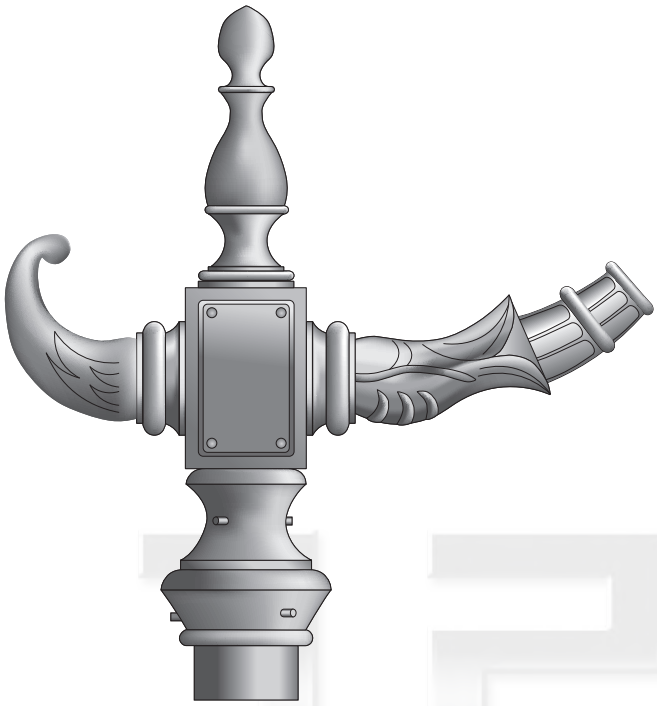

#CAALH - 1
ALHAMBRA 2 PIECE SLEEVE

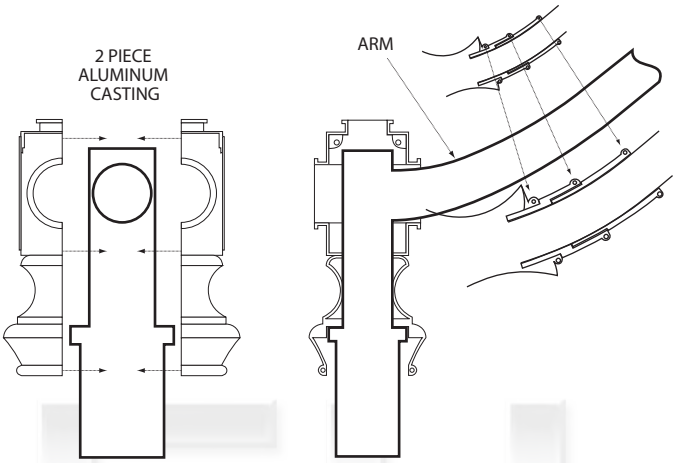

BREAKAWAY *COUPLING*

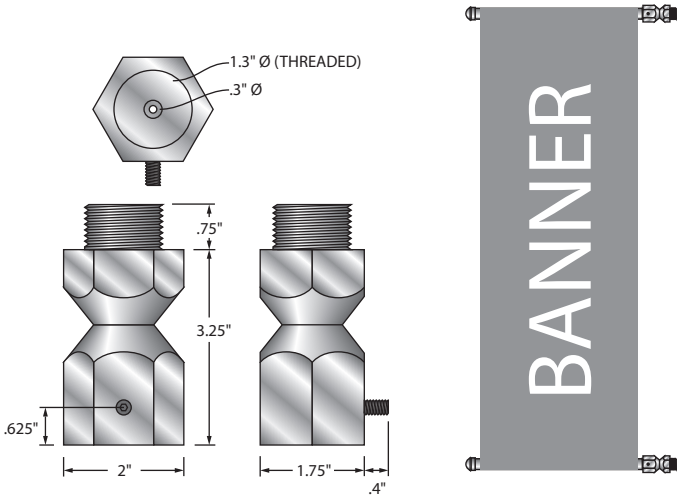

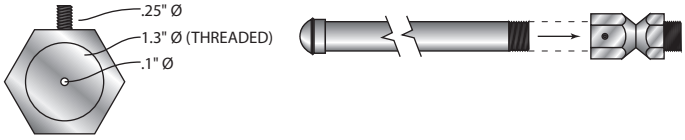

#BKWYCPL
BREAKAWAY COUPLING

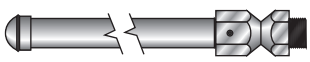

SHOWN WITH BANNER ARM

REMOVABLE *TENON*

#TT43
REMOVABLE
TENON

CAST ALUMINUM

356 ALLOY

SLIPS INTO 4" TUBE FOR ROUND POLES

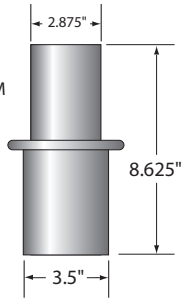

LADDER *RESTS*

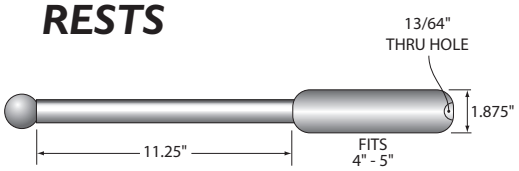

#LADDER REST LR - 1

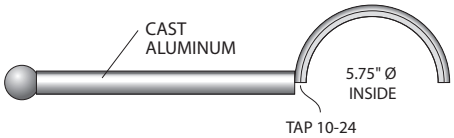

Due to continuing improvement, 1245 Industries, LLC reserves the right to change dimensions, designs, and construction from that which is shown in this brochure.

BANNER *CLAMPS*

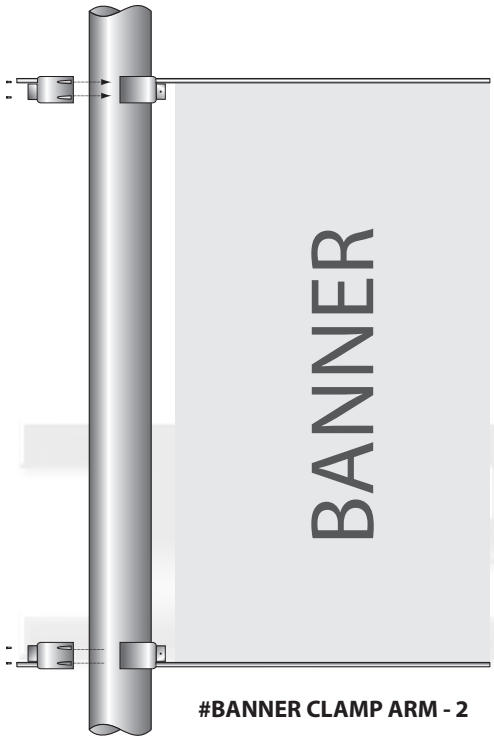

#BANNER CLAMP ARM - 2

2 PIECE *CLAMPS*

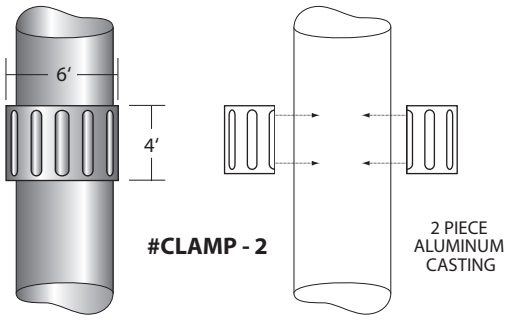

#CLAMP - 2

Clamps available to fit a 4″, 5″, and 8″ smooth or fluted pole.

PLANTER & SPEAKER *CLAMPS*

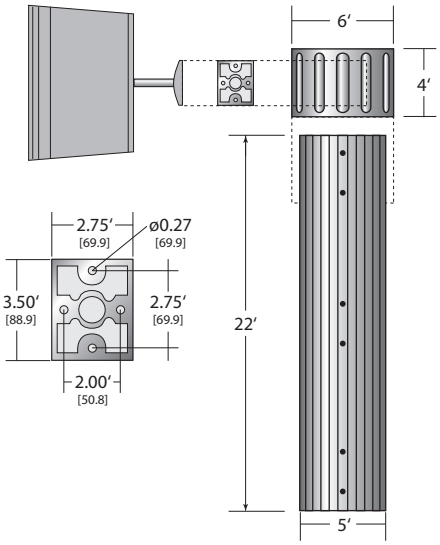

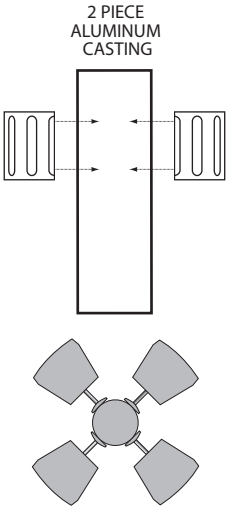

UP TO 4 SPEAKERS
PER BRACKET

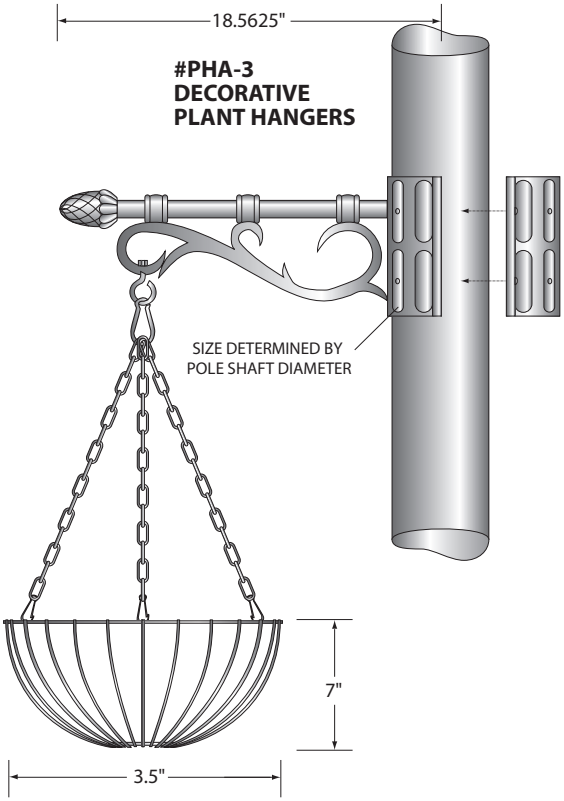

#PHA-3
DECORATIVE
PLANT HANGERS

Due to continuing improvement, 1245 Industries, LLC reserves the right to change dimensions, designs, and construction from that which is shown in this brochure.

1254 Industries, LLC, 1444 Alpine Pl, San Marcos CA 92078 • VOICE 760.798.8531 • FAX 760.798.8535
sales@1254industries.com • WWW.1254INDUSTRIES.COM

(DECORATIVE NON-STRUCTURAL)

REDUCER *COLLARS*

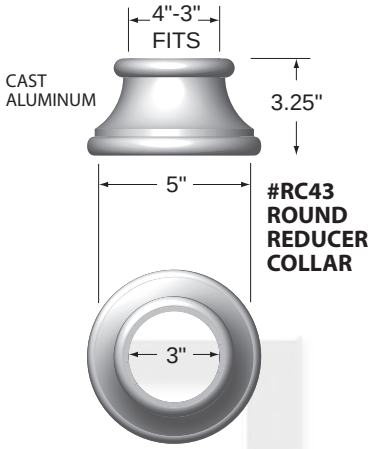

#RC43 ROUND REDUCER COLLAR

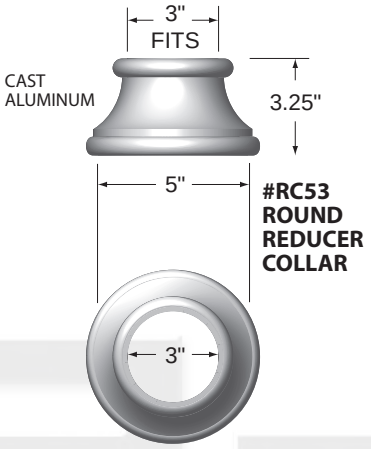

#RC53 ROUND REDUCER COLLAR

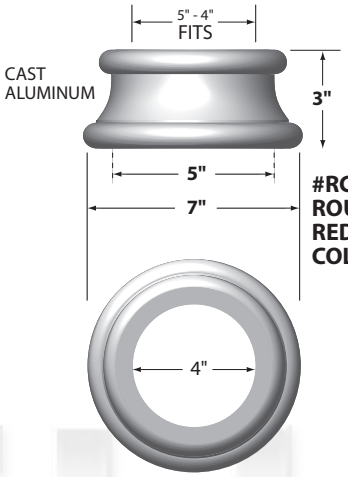

#RC54 ROUND REDUCER COLLAR

ACCESSORIES

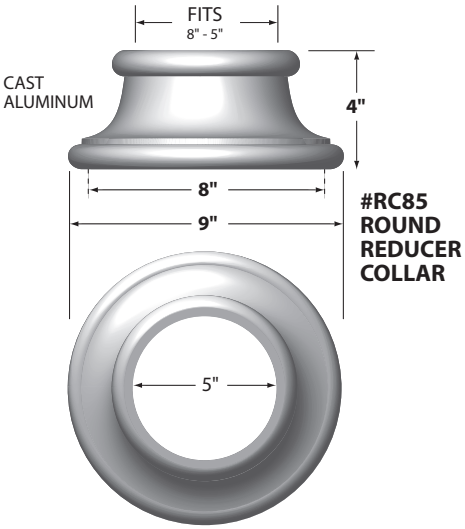

#RC85 ROUND REDUCER COLLAR

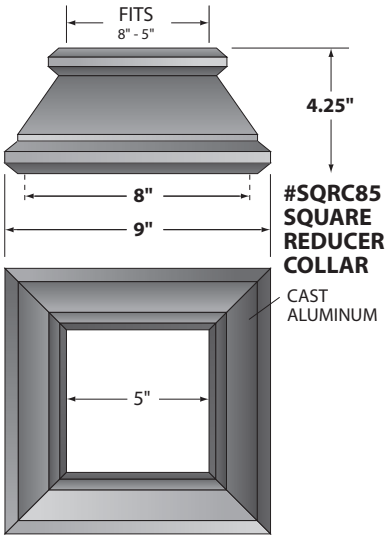

#SQRC85 SQUARE REDUCER COLLAR

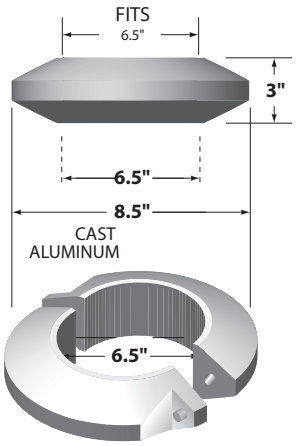

#DC38 2 PIECE DECORATIVE COLLAR

Due to continuing improvement, 1245 Industries, LLC reserves the right to change dimensions, designs, and construction from that which is shown in this brochure.

DECORATIVE POLE TOP FINIALS

#PCSTE - 303 STERLING FINIAL

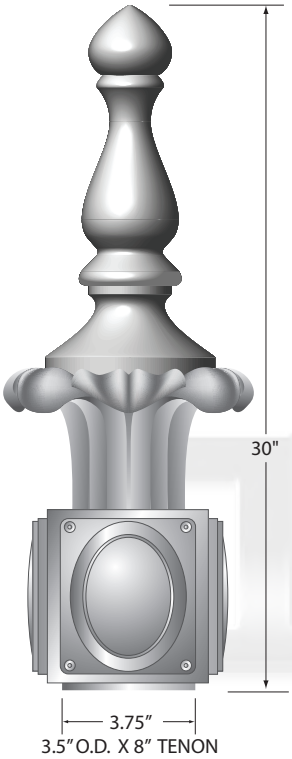

#PCRCH - 17 RICHMOND FINIAL

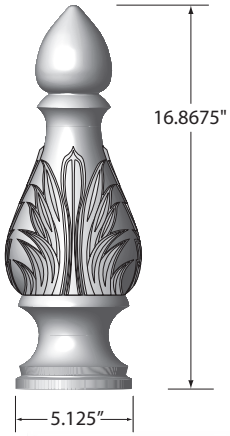

#PCPIN - 18 PINEAPPLE 3 FINIAL

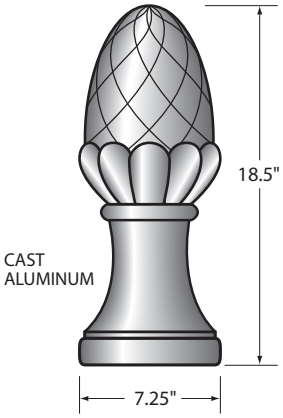

#PCPOP - 13 POPPY FINIAL

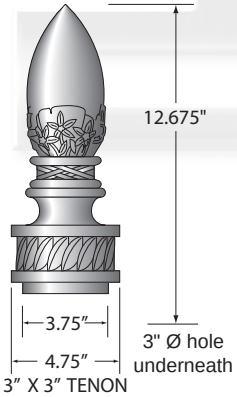

#PCPIN - 11 PINEAPPLE 2 FINIAL

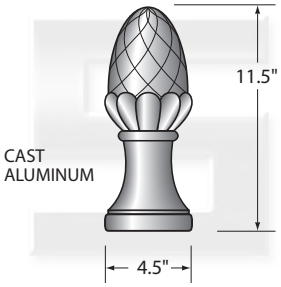

#PCHUN - 303 HUNTINGTON

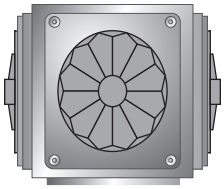

#PCTAM - 303 TAMPA

#PCUNI - 125 UNITED FINIAL

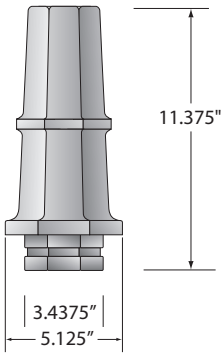

#PCMAR - 20 MARQUEZ FINIAL

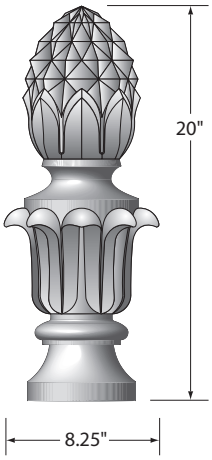

#PCVIS - 7 VISTA 1 FINIAL

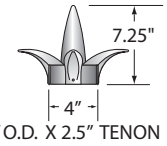

#PCVIS - 13 VISTA 2 FINIAL

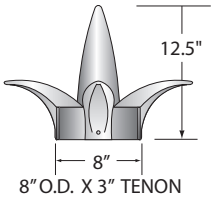

#PCVIS - 20 VISTA 3 FINIAL

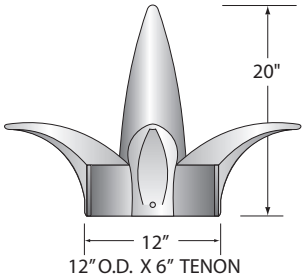

CAP *ACCESSORIES*

#PCGOL - 5 GOLD CAP

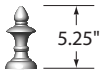

#PCSPI - 5 SPIKE 2 CAP

#PCA-P PINEAPPLE CAP

#PCFLE-7 FLEUR DE LIS CAP

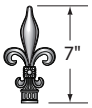

#PCALH-15 ALHAMBRA CAP

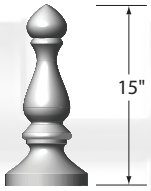

#PCA-B BALL CAP

#PCA-H HAMMER CAP

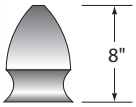

#PCACR-9 ACORN CAP

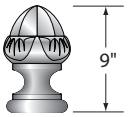

#PCR4-D DOME POLE CAP

#PCIRV - 5 IRVINE FINIAL

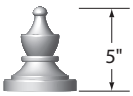

#PCBAL - 33 BELL POINT FINIAL

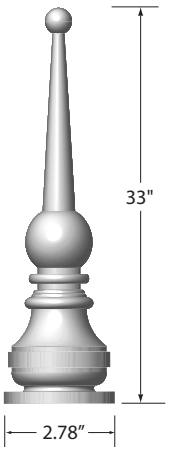

#PCSPI - 9 SPIKE FINIAL

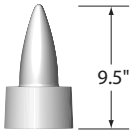

#PCTER - 12 TERRACE FINIAL

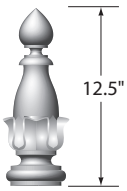

Due to continuing improvement, 1245 Industries, LLC reserves the right to change dimensions, designs, and construction from that which is shown in this brochure.

1254 Industries, LLC, 1444 Alpine Pl, San Marcos CA 92078 • VOICE 760.798.8531 • FAX 760.798.8535
sales@1254industries.com • WWW.1254INDUSTRIES.COM

POLE CAPS

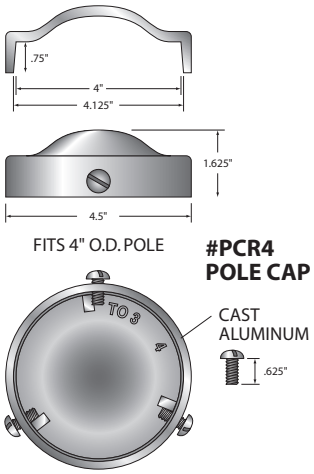

FITS 4" O.D. POLE

#PCR4 POLE CAP

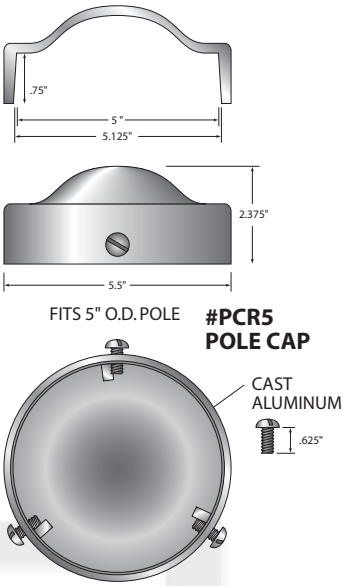

FITS 5" O.D. POLE

#PCR5 POLE CAP

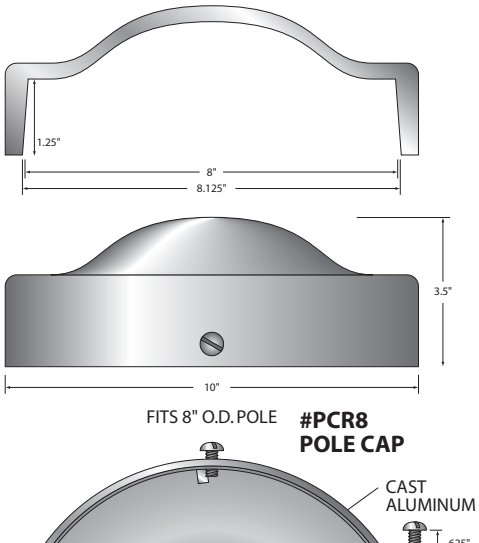

FITS 8" O.D. POLE

#PCR8 POLE CAP

#PCO4 OCTAGON POLE CAP

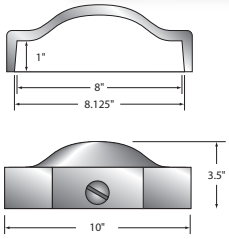

FITS 4" O.D. POLE

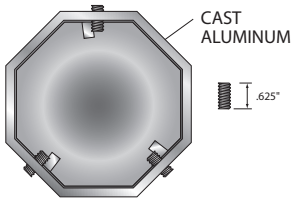

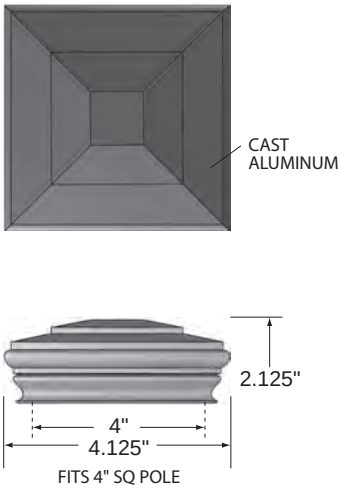

FITS 4" SQ POLE

#PCSQ4 POLE CAP

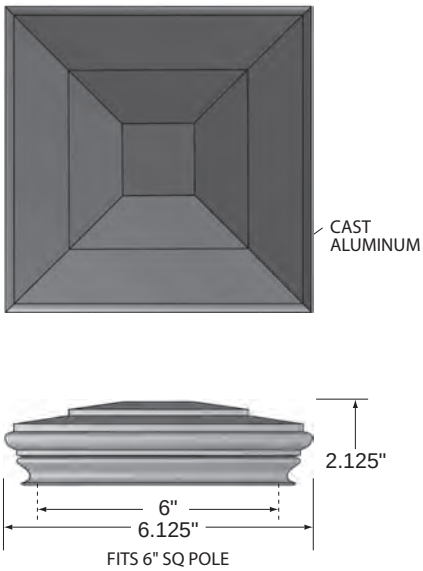

FITS 6" SQ POLE

#PCSQ6 POLE CAP

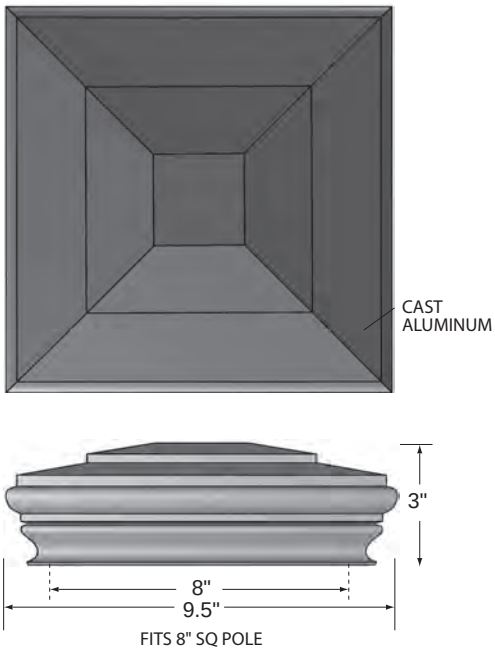

FITS 8" SQ POLE

#PCSQ8 POLE CAP

Due to continuing improvement, 1245 Industries, LLC reserves the right to change dimensions, designs, and construction from that which is shown in this brochure.

HUNTINGTON ROUND *SERIES*

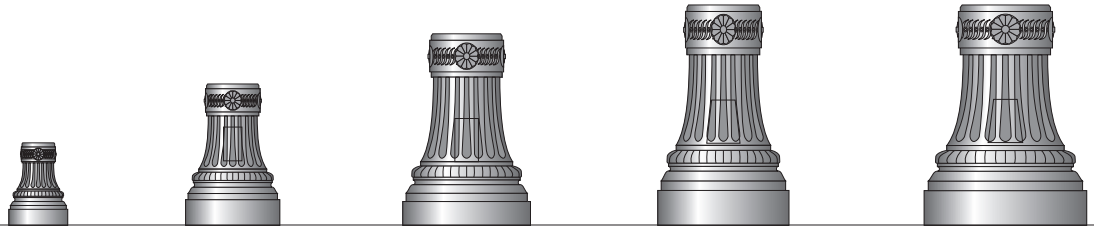

#BCHUN1115
H.15.75" - W. 11.25"

#BCHUN1827
H. 27" - W. 18.5"

#BCHUN2436
H. 36.5" - W. 24.5"

#BCHUN2542
H. 42" - W. 25.5"

#BCHUN3142
H. 42" - W. 31"

STERLING ROUND *SERIES*

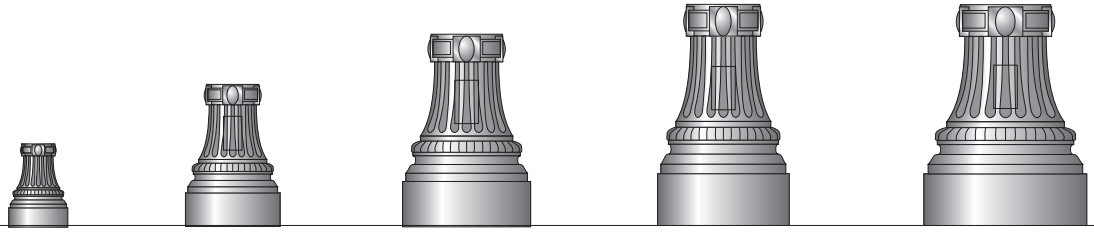

#BCSTR1115
H.15.75" - W. 11.25"

#BCSTR1827
H. 27" - W. 18.5"

#BCSTR2436
H. 36.5" - W. 24.5"

#BCSTR2542
H. 42" - W. 25"

#BCSTR3142
H. 42" - W. 31"

OXFORD ROUND *SERIES*

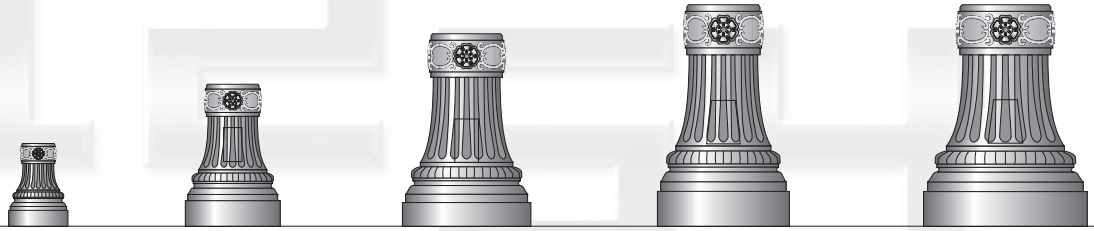

#BCOXF1115
H.15.75" - W. 11.25"

#BCOXF1827
H. 27" - W. 18"

#BCOXF2436
H. 36.5" - W. 24.5"

#BCOXF2542
H. 42" - W. 25.5"

#BCOXF3142
H. 42" - W. 31"

CORSICAN ROUND *SERIES*

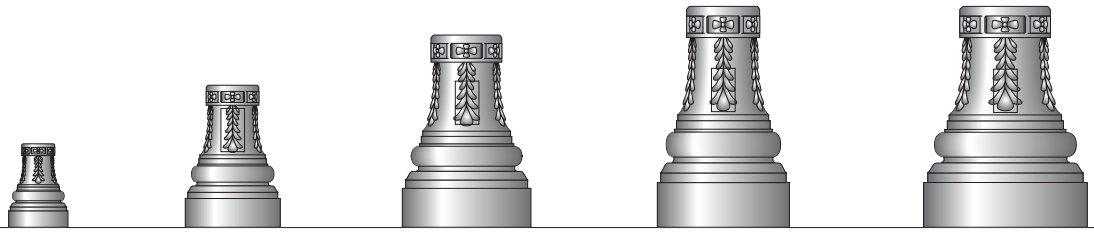

#BCCRN1218
H. 18" - W. 12"

#BCCRN1827
H. 27" - W. 18"

#BCCRN2436
H. 36.5" - W. 24.5"

#BCCRN2542
H. 42" - W. 25"

#BCCRN3142
H. 42" - W. 31"

WASHINGTON ROUND *SERIES*

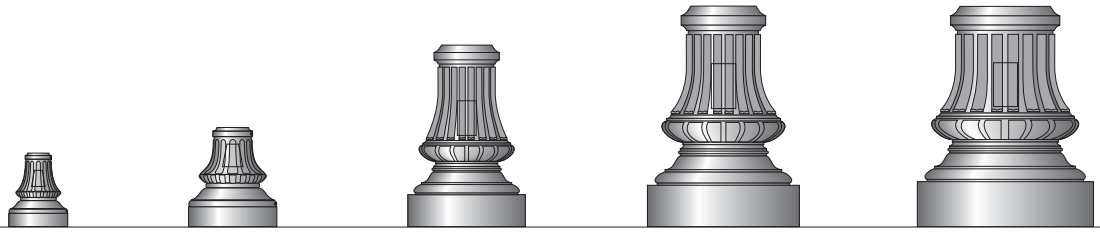

#BCWAR1215
H. 15" - W. 12"

#BCWAR1820
H. 20.25" - W. 18"

#BCWAR2537
H. 37" - W. 25"

#BCWAR3040
H. 40" - W. 30.5"

#BCWAR3643
H. 43" - W. 36"

COAST *SERIES*

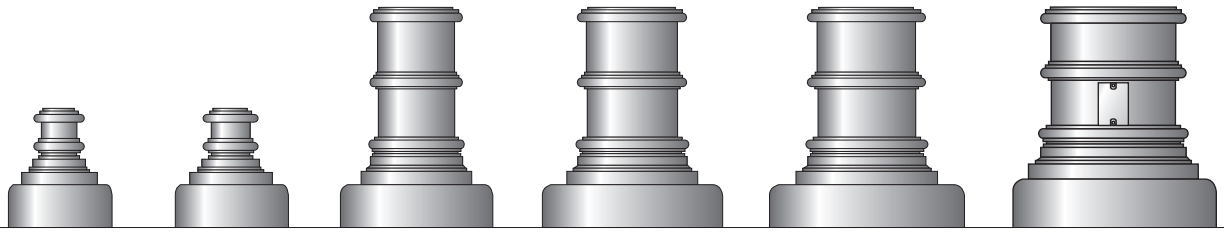

#BCCST1821
H. 21.25" - W.18.375"

#BCCST2021
H. 21.25" - W. 20"

#BCCST2739
H. 39" - W. 27"

#BCCST3239
H. 39" - W. 32"

#BCCST3439
H. 39" - W. 34.5"

#BCCST3639
H. 39" - W. 36"

Due to continuing improvement, 1245 Industries, LLC reserves the right to change dimensions, designs, and construction from that which is shown in this brochure.

1254 Industries, LLC, 1444 Alpine Pl, San Marcos CA 92078 • VOICE 760.798.8531 • FAX 760.798.8535
sales@1254industries.com • WWW.1254INDUSTRIES.COM

HUNTINGTON OCTAGONAL *SERIES*

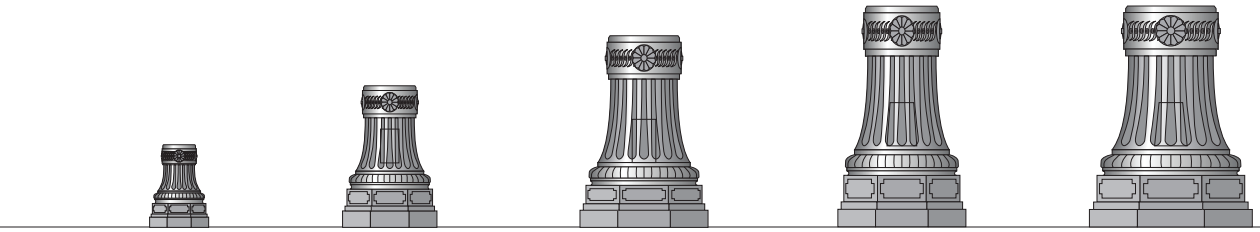

#BCHUO1115
H.15.75" - W. 11.25" FL-FL

#BCHUO1827
H. 27" - W. 18.5" FL-FL

#BCHUO2436
H. 36.5" - W. 24.5" FL-FL

#BCHUO2542
H. 42" - W. 25" FL-FL

#BCHUO3142
H. 42" - W. 31" FL-FL

STERLING OCTAGONAL *SERIES*

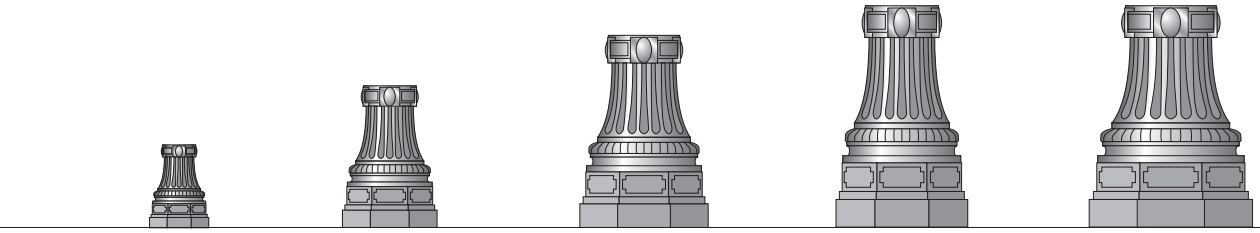

#BCSTE1115
H.15.75" - W. 11.25" FL-FL

#BCSTE1827
H. 27" - W. 18.5" FL-FL

#BCSTE2436
H. 36.5" - W. 24.5" FL-FL

#BCSTE2542
H. 42" - W. 25" FL-FL

#BCSTE3142
H. 42" - W. 31" FL-FL

OXFORD OCTAGONAL *SERIES*

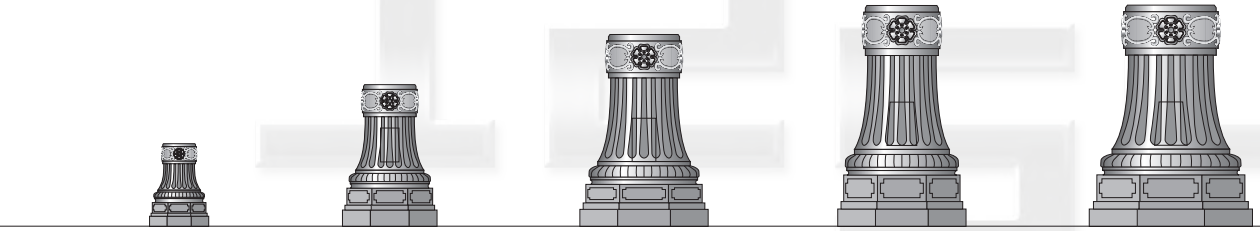

#BCOXO1115
H.15.75" - W. 11.25" FL-FL

#BCOXO1827
H. 27" - W. 18.5" FL-FL

#BCOXO2436
H. 36.5" - W. 24.5" FL-FL

#BCOXO2542
H. 42" - W. 25" FL-FL

#BCOXO3142
H. 42" - W. 31" FL-FL

CORSICAN OCTAGONAL *SERIES*

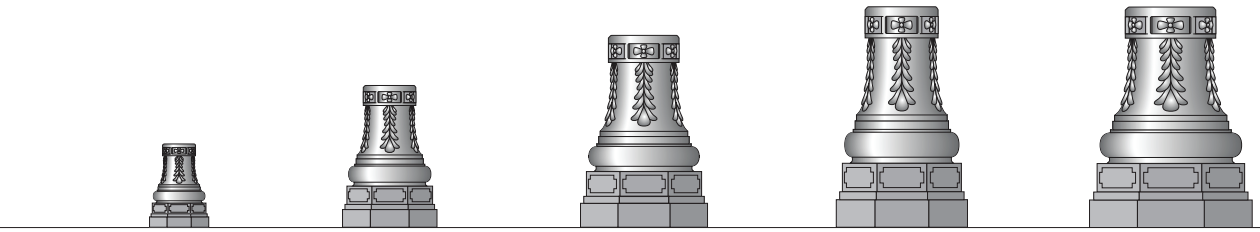

#BCCOR1218
H. 18" - W. 12"

#BCCOR1827
H. 27" - W. 18"

#BCCOR2436
H. 36.5" - W. 24.5"

#BCCOR2542
H. 42" - W. 25"

#BCCOR3142
H. 42" - W. 31"

WASHINGTON OCTAGONAL *SERIES*

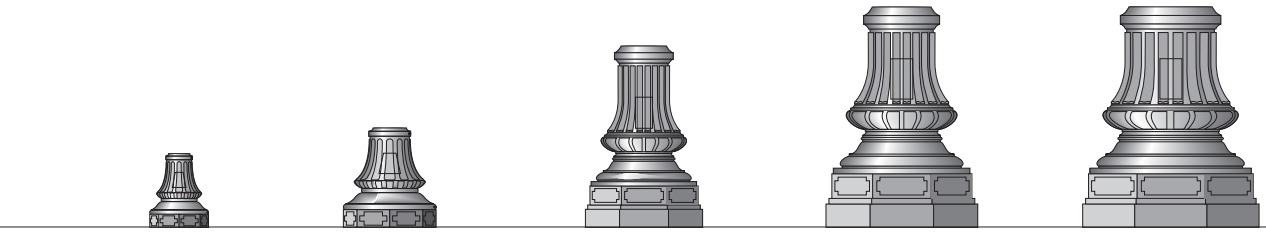

#BCWAO1215
H. 15" - W. 12" FL-FL

#BCWAO1820
H. 20.25" - W. 18.5" FL-FL

#BCWAO2537
H. 37" - W. 25" FL-FL

#BCWAO3240
H. 40" - W. 32.25" FL-FL

#BCWAO3643
H. 43" - W. 36" FL-FL

LAGUNA *SERIES*

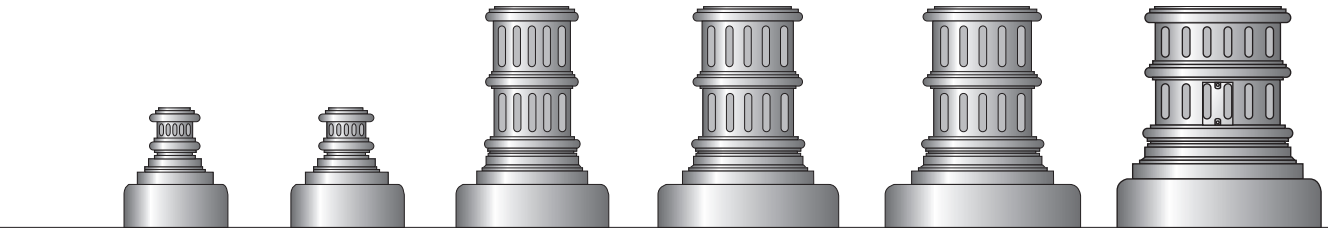

#BCLAG1821
H. 21.25" - W. 18.375"

#BCLAG2021
H. 21.25" - W. 20"

#BCLAG2739
H. 39" - W. 27"

#BCLAG3239
H. 39" - W. 32"

#BCLAG3439
H. 39" - W. 34.5"

#BCLAG3639
H. 39" - W. 36"

Due to continuing improvement, 1245 Industries, LLC reserves the right to change dimensions, designs, and construction from that which is shown in this brochure.

TUSTIN HEXAGON
FLUTED SERIES

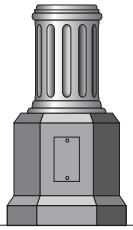

#BCTUS2044
H. 44.25" - W. 20" FL-FL

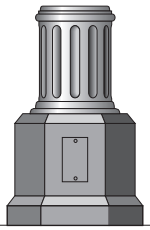

#BCTUS2444
H. 44.25" - W. 24" FL-FL

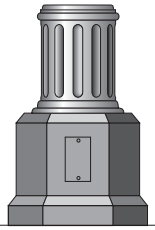

#BCTUS2744
H. 44" - W. 27" FL-FL

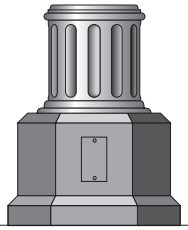

#BCTUS3044
H. 44.25" - W. 30" FL-FL

TUSTIN HEXAGON
SMOOTH SERIES

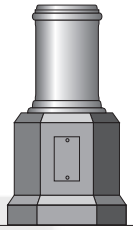

#BCTUS2044-S
H. 44.25" - W. 20" FL-FL

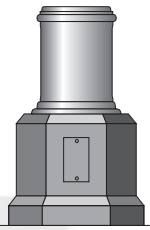

#BCTUS2444-S
H. 44.25" - W. 24" FL-FL

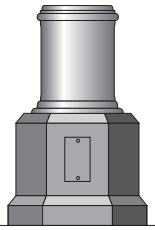

#BCTUS2744-S
H. 44" - W. 27" FL-FL

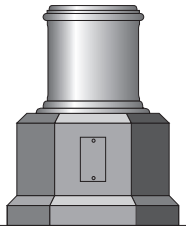

#BCTUS3044-S
H. 44.25" - W. 30" FL-FL

TRILOGY ROUND
SERIES

#BCTRI1214
H. 14.25" - W. 12"

#BCTRI1620
H. 20" - W. 16"

#BCTRI2027
H. 27" - W. 20"

#BCTRI3140
H. 40" - W. 31"

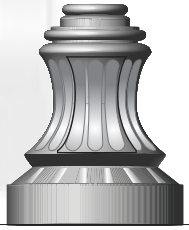

#BCTRI3645
H. 45" - W. 36"

OCEAN OCTAGONAL
SERIES

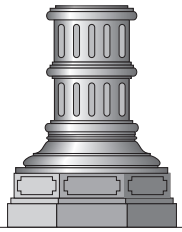

#BCOCO3240-F
H.40" - W. 32.25" FL-FL

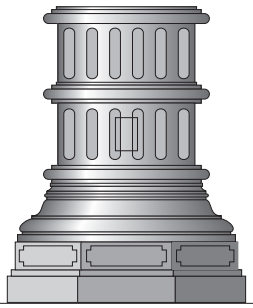

#BCOCO3640-F
H. 40.25" W. 36" FL-FL

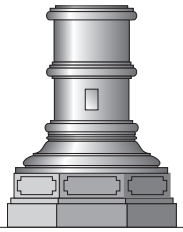

#CBCCO3240-S
H.40" - W. 32.25" FL-FL

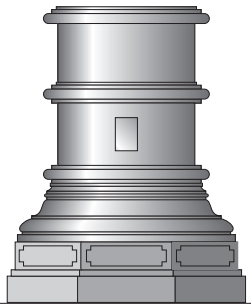

#BCOCO3640-S
H. 40.25" W. 36" FL-FL

JEFFERSON
SERIES

#BCJEF1019
H. 19" - W. 10"

#BCJEF1924
H. 24" - W. 19"

#BCJEF1733
H. 33" - W. 17"

#BCJEF2548
H. 48" - W. 25"

#BCJEF2948
H. 48" - W. 29"

#BCJEF3248
H. 48" - W. 32"

Due to continuing improvement, 1245 Industries, LLC reserves the right to change dimensions, designs, and construction from that which is shown in this brochure.

1254 Industries, LLC, 1444 Alpine Pl, San Marcos CA 92078 • VOICE 760.798.8531 • FAX 760.798.8535
sales@1254industries.com • WWW.1254INDUSTRIES.COM

DELMAR
FLUTED SERIES

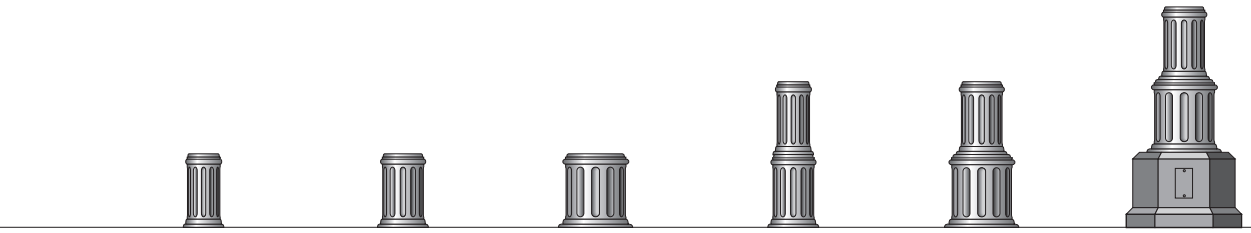

#BCDEL1221
H. 21.75" - W. 12"

#BCDEL1521
H. 21.75" - W. 15"

#BCDEL2221
H. 21.75" - W. 22"

#BCDEL1543
H. 43" - W. 15"

#BCDEL2243
H. 43" - W. 22"

#BCDEL3065
H. 65" - W. 30" FL-FL

SERIES

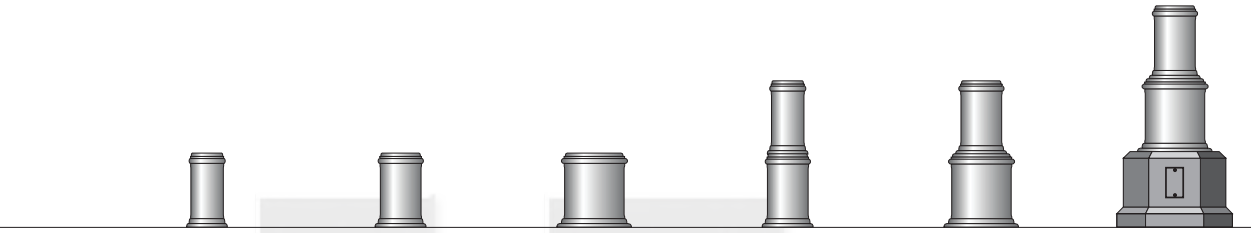

#BCDEL1221-S
H. 21.75" - W. 12"

#BCDEL1521-S
H. 21.75" - W. 15"

#BCDEL2221-S
H. 21.75" - W. 22"

#BCDEL1543-S
H. 43" - W. 15"

#BCDEL2243-S
H. 43" - W. 22"

#BCDEL3065-S
H. 65" - W. 30" FL-FL

TAMPA
SERIES

#BCTAM1112
H. 12" - W. 11" FL-FL

#BCTAM1719
H. 19" - W. 17" FL-FL

#BCTAM2326
H. 26" - W. 23.5" FL-FL

#BCTAM3034
H. 34" - W. 30" FL-FL

#BCTAM3645
H. 45" - W. 36" FL-FL

OCEAN ROUND
SERIES

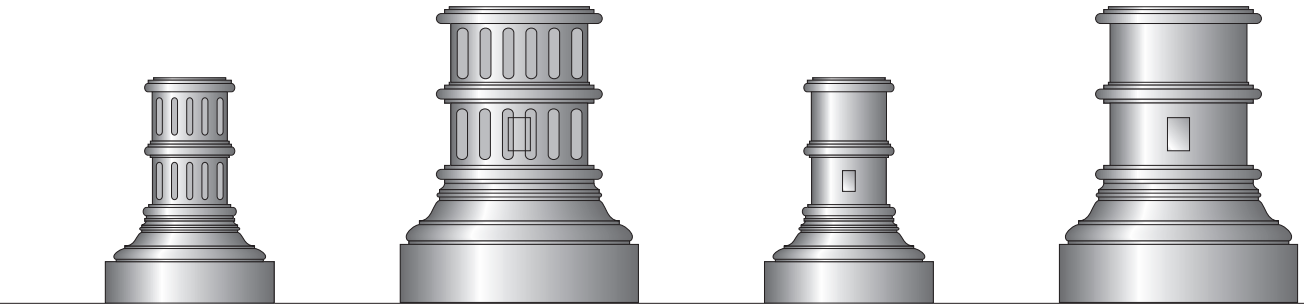

#BCOCR3040-F
H.40" - W. 30"

#BCOCR3640-F
H. 40.25" W. 36"

#BCOCR3040-S
H.40" - W. 30"

#BCOCR3640-S
H. 40.25" W. 36"

VISTA
SERIES

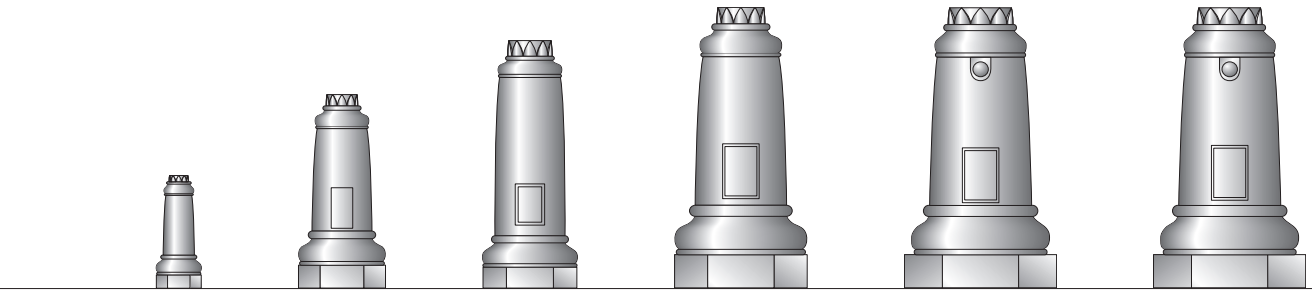

#BCVIS0921
H. 20.5" - W. 9" FL-FL

#BCVIS1735
H. 35.25" - W. 16.5" FL-FL

#BCVIS1845
H. 45" - W. 18.25" FL-FL

#BCVIS2451
H. 51" - W. 23.75" FL-FL

#BCVIS2951
H. 51" - W. 28.5" FL-FL

#BCVIS3451
H. 51" - W. 33.75" FL-FL

Due to continuing improvement, 1245 Industries, LLC reserves the right to change dimensions, designs, and construction from that which is shown in this brochure.

SUNSET
SERIES

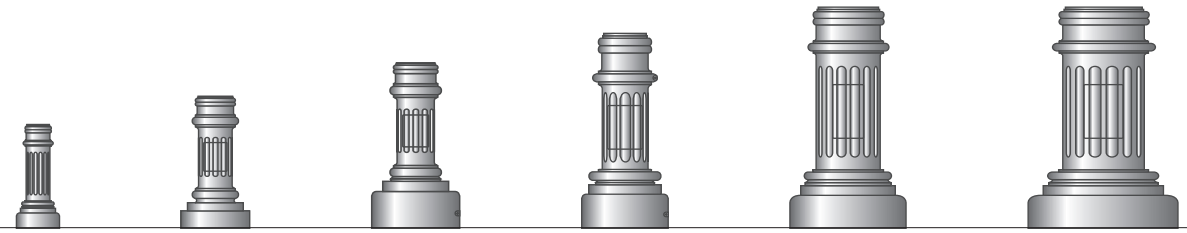

#BCSUN1024
H. 24" - W. 10"

#BCSUN1630
H. 30.625" - W. 16"

#BCSUN1834
H. 34.5" - W. 18.375"

#BCSUN2045
H. 45" - W. 20"

#BCSUN2751
H. 51.125" - W. 27"

#BCSUN3251
H. 51.125" - W. 32"

MARQUEZ

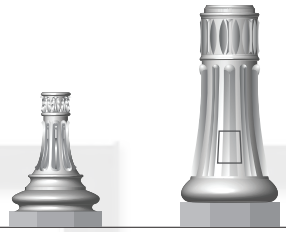

#BCMAR1930
H. 30" - W. 19" FL-FL

#BCMAR2454
H. 54" - W. 24" FL-FL

WELLINGTON

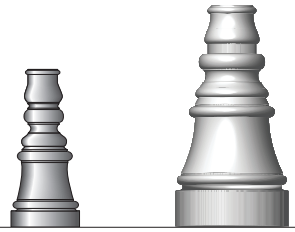

#BCWEL1023
H. 23" - W. 10"

#BCWEL2033
H. 33" - W. 20"

SUMMER

#BCSUM1830
H. 30" - W. 18"

OTHER CUSTOM
BASES

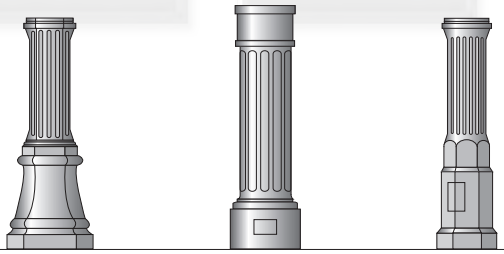

#BCBOL405-1438
H. 38" - W.14.25" FL-FL

#BCBOL205-1240
H. 40" - W. 11.5"

#BCBOL505-1038
H. 38" - W. 10"

#BCBOL805-1140
H. 40" - W. 11.375"

BERKSHIRE

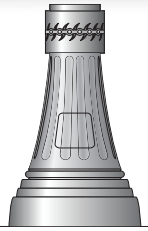

#BCBER1830
H. 30" - W. 18"

ARIZONA

#BCARI1626
H. 26" - W. 16"

BROADWAY TUNDRA & HAMILTON
BASES

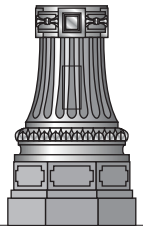

#BCBRO2440
H. 40" - W. 23.5"FL-FL

#BCTUN2537
H. 37" - W. 24.75" FL-FL

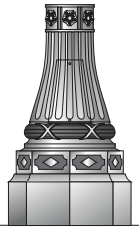

#BCHAM2341
H. 40.5" - W. 22.5" FL-FL

ONE PIECE STRUCTURAL
BASES

ALOHA

#SBCALO1827
H. 26.6875" - W. 18"

HUNTINGTON

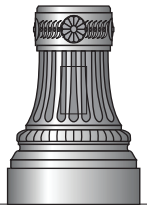

#SBCHUN1827
H. 27" - W. 18"

PROMENADE

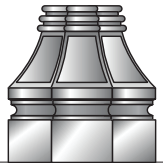

#SBCPRO2021
H. 21.25" - W. 20 FL-FL

MARQUEZ

#SBCMAR1930
H. 30" - W. 19" FL-FL

WASHINGTON

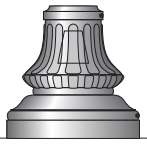

#SBCWAR1818
H. 18" - W. 18"

Due to continuing improvement, 1245 Industries, LLC reserves the right to change dimensions, designs, and construction from that which is shown in this brochure.

1254 Industries, LLC, 1444 Alpine Pl, San Marcos CA 92078 • VOICE 760.798.8531 • FAX 760.798.8535
sales@1254industries.com • WWW.1254INDUSTRIES.COM

RANCHO
FLUTED & SMOOTH BASES

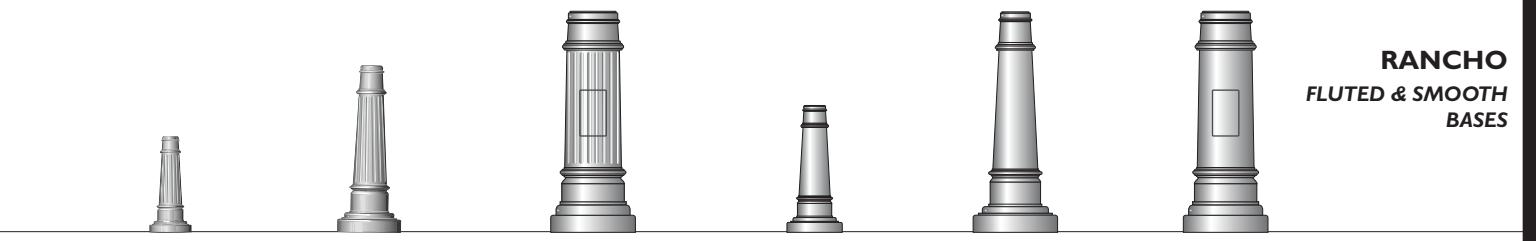

#BCRAN1024-F
H. 24" - W. 10.5"

#BCRAN1642-F
H. 42" - W. 16"

#BCRAN1642-F
H. 24 " - W. 10.5"

#BCRAS1024-S
H. 42" - W. 16"

#BCRAS1642-S
H. 30" - W. 19" FL-FL

#BCRAS1642-S
H. 30" - W. 19" FL-FL

ATHENA

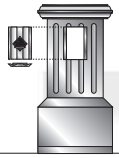

#BCATH816 / H. 16" - W. 8"
T0P FITS 4"SQ POLES

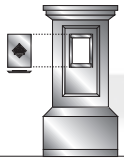

#BCCAP816 / H. 16.25" - W. 8"
T0P FITS 4"SQ POLES

RICHMOND

#BCRCH1619
H. 19" - W. 16"

MONTREAL SERIES

#BCMON168
H. 8.5" - W. 16"

#BCMON1211
H. 11.125" - W. 12.875"

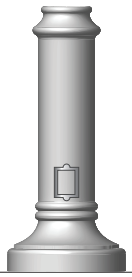

#BCMON1942
H. 42" - W. 19"

REVERE SMALL

#BCRVS1123
H. 23" - W. 11"

REVERE LARGE

#BCRVL1223
H. 23.25" - W. 12"

FLORENCE

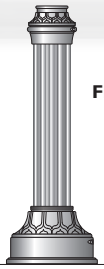

#BCFLO1150
H. 30" - 50" - W. 11.625"

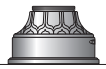

#BCFLO1111
H. 11.125" - W. 11.625"

SPRING SERIES

#BCSPR1707
H. 7" - W. 16.5625"

#BCSPR1120
H. 20" - W. 11.5"

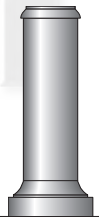

#BCSPR1741
H. 41" - W. 16.5625"

UNITED & HARBOR
SERIES

#BCUNO1214
H. 14" - W. 11.375" FL-FL

#BCUNO1415
H. 15.5" - W. 14.25" FL-FL

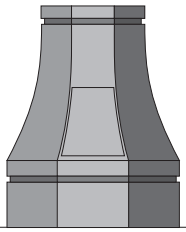

#BCUNO2836
H. 36" - W. 28"

#BCHAR1026
H. 26" - W. 10"

#BCHAR1636
H. 36" - W. 16"

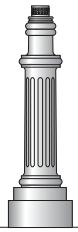

#BCHAR1654
H. 54" - W. 16"

BC1-8

#BC1-8
H. 4.8125" - W. 14.625"

BC1-MOD

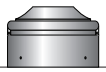

#BC1-MOD
H. 7.75" - W. 11.75"

BC1-4

#BC1-4
H. 4.75" - W. 11.75"

BC1-88

#BC1-88
H. 11.125" - W. 14.4375"

BC225

#BC225
H. 11.5" - W. 13"

#BC205
H. 11.125" - W. 11.5"

Due to continuing improvement, 1245 Industries, LLC reserves the right to change dimensions, designs, and construction from that which is shown in this brochure.

CUSTOM PARTS AVAILABLE

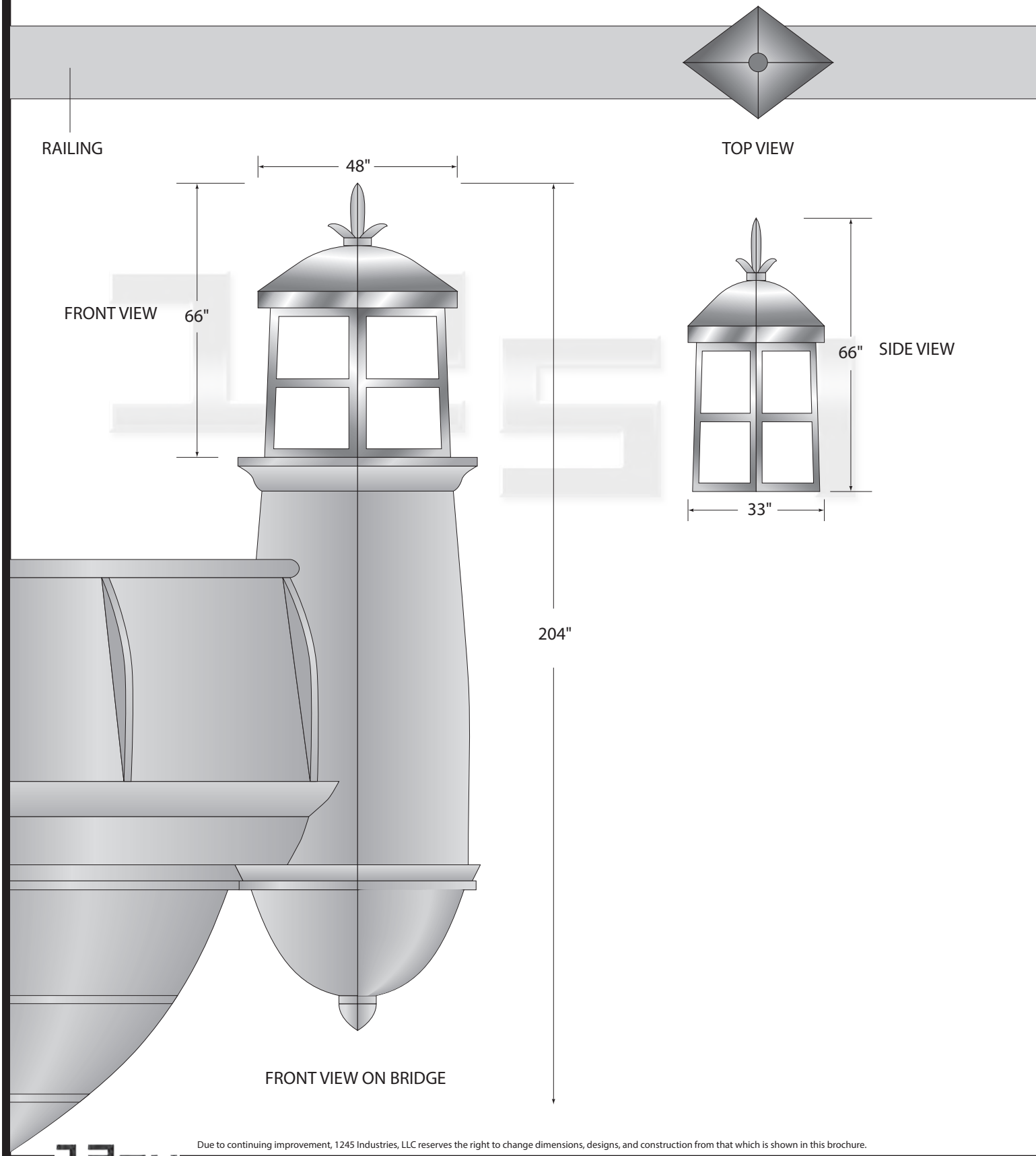

Due to continuing improvement, 1245 Industries, LLC reserves the right to change dimensions, designs, and construction from that which is shown in this brochure.

1254 Industries, LLC, 1444 Alpine Pl, San Marcos CA 92078 • VOICE 760.798.8531 • FAX 760.798.8535
sales@1254industries.com • WWW.1254INDUSTRIES.COM

SIGNAGE

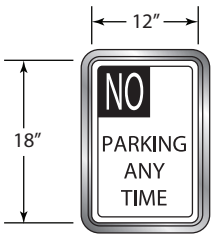

#SGN24-
R30-1824

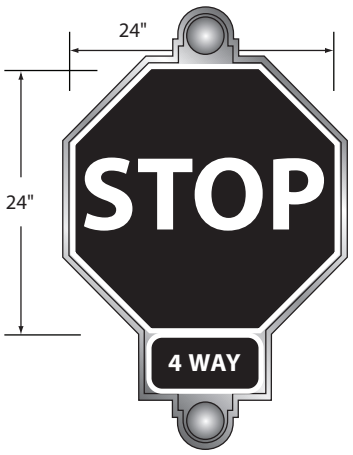

#DSGN23-R1-24
AVAILABLE IN 18", 24", 30" & 36"

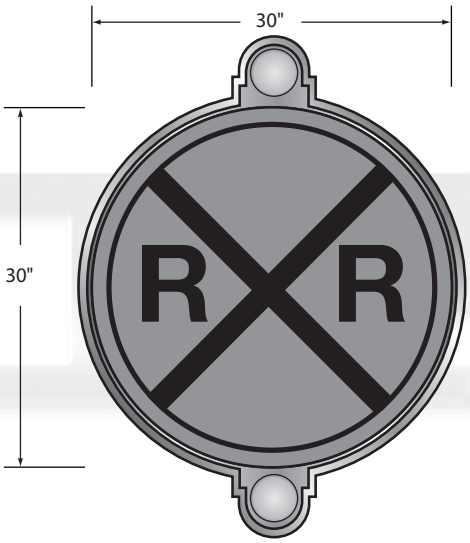

#DSGN25-W47-30
AVAILABLE IN 30" & 36"

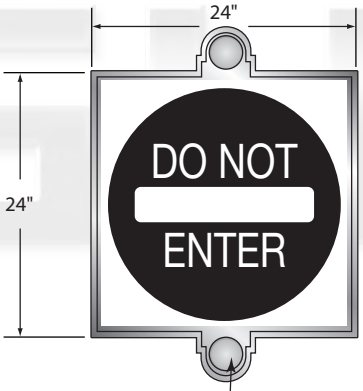

#DSGN27-W41-24
AVAILABLE IN 24" 30" & 36

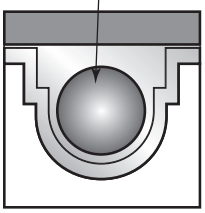

PLACE YOUR
LOGO HERE

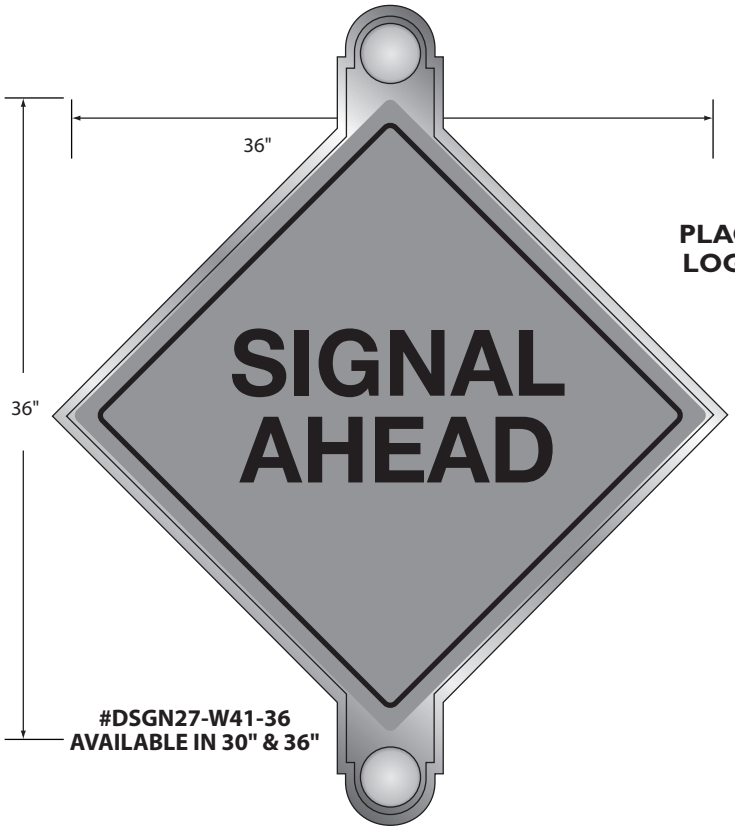

#DSGN27-W41-36
AVAILABLE IN 30" & 36"

#DSGN2-W41-1127
DECORATIVE STREET SIGN
LETTERS ARE CAST
INTO FRAME

Due to continuing improvement, 1245 Industries, LLC reserves the right to change dimensions, designs, and construction from that which is shown in this brochure.

MAILBOXES WITH POLES

HARBOR
BASE

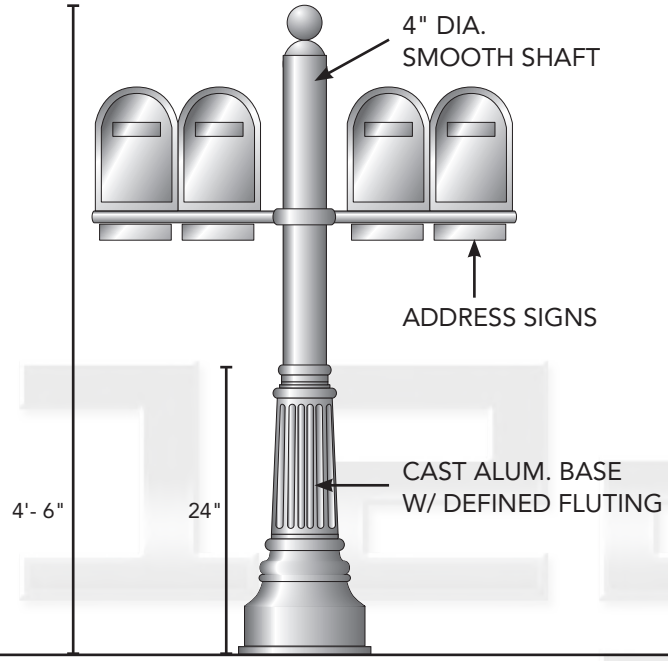

K274S - 4MB
3MB
2MB

CORSICAN
BASE

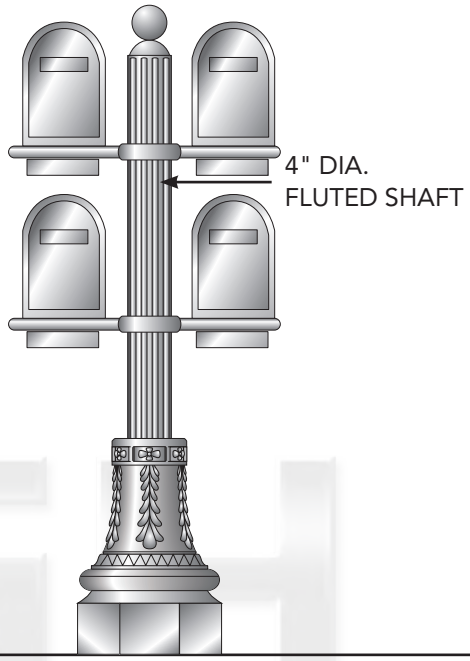

K334F - 2 - 4MB
2 - 3MB
2 - 2MB

WASHINGTON ROUND
BASE

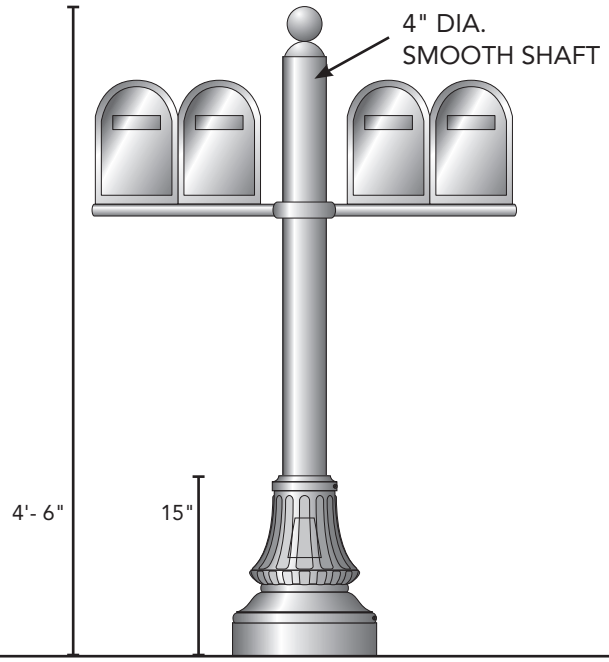

K884S - 4ILMB
3ILMB
2ILMB

STERLING
BASE

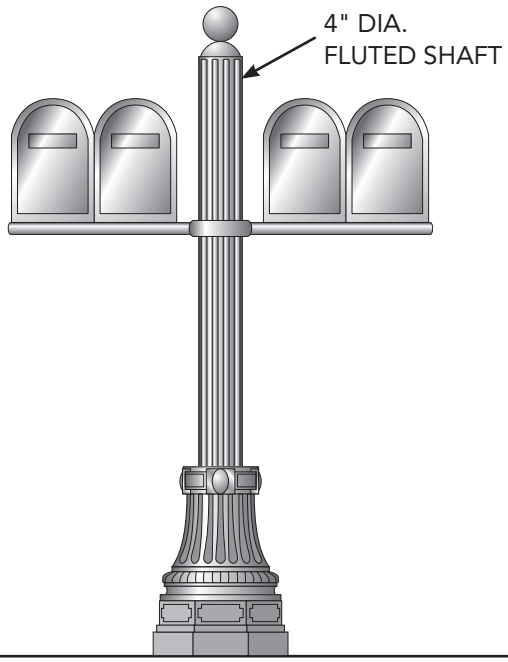

K624F - 4ILMB
3ILMB
2ILMB

Due to continuing improvement, 1245 Industries, LLC reserves the right to change dimensions, designs, and construction from that which is shown in this brochure.

1254 Industries, LLC, 1444 Alpine Pl, San Marcos CA 92078 • VOICE 760.798.8531 • FAX 760.798.8535
sales@1254industries.com • WWW.1254INDUSTRIES.COM

CUSTOM LOGO

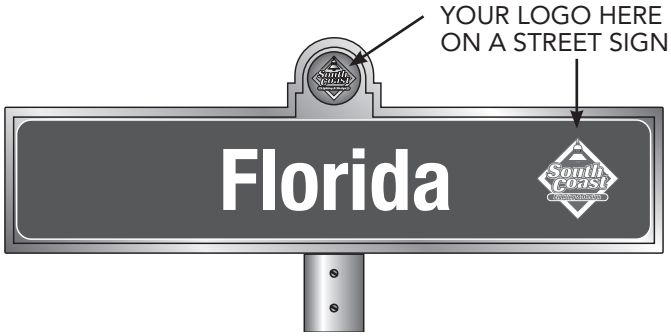

STEP #1 - DETERMINE SIZE OF LOGO THAT YOU WILL NEED, I.E. 4" ROUND (STANDARD), 5" ROUND, OR CUSTOM

STEP #2 - DETERMINE LOCATION OF WHERE LOGO WILL BE PLACED, I.E. HAND HOLE DOOR, BOTTOM OF BASE

STEP #3 - EMAIL A BLACK & WHITE COPY TO 1254 INDUSTRIES, LLC (.JPG, VECTOR, .AI, .PDF, .EPS)

STEP #4 - VERIFY LOGO PRINT PRIOR TO CASTING

STEP #5 - APPROVE SAMPLE OF CAST LOGO

STEP #6 - WAIT FOR LOGOS TO ARRIVE ON PARTS

YOUR LOGO ON TOP AND BOTTOM OF STREET SIGN FRAMES

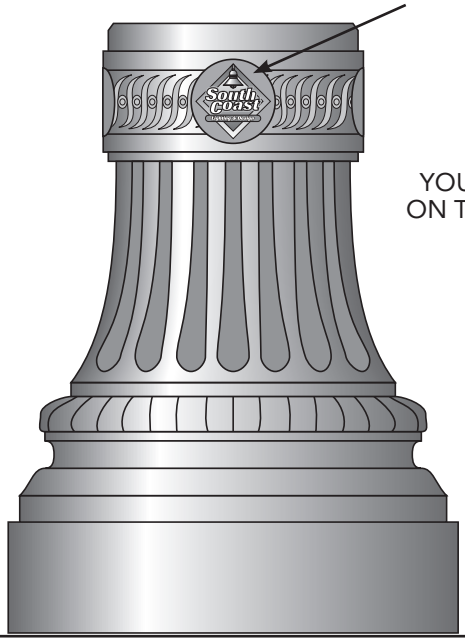

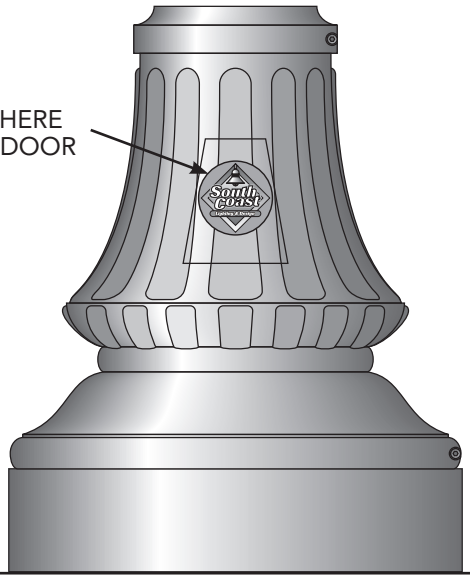

Due to continuing improvement, 1245 Industries, LLC reserves the right to change dimensions, designs, and construction from that which is shown in this brochure.

Photos of Castings

HUNTINGTON ROUND
PG 2

HUN2031
PG 02

STERLING OCTAGONAL PG 4

OXFORD ROUND-LARGE
PG 6

CORSICAN OCTAGONAL
PG 08

CORSICAN ROUND
PG 08

COAST
PG 12

TUSTIN
PG 14

TAMPA
PG 16

OCEAN
PG 19

Due to continuing improvement, 1245 Industries, LLC reserves the right to change dimensions, designs, and construction from that which is shown in this brochure.

1254 Industries, LLC, 1444 Alpine Pl, San Marcos CA 92078 • VOICE 760.798.8531 • FAX 760.798.8535
sales@1254industries.com • WWW.1254INDUSTRIES.COM

VISTA
PG 22

JEFFERSON
PG 22

Due to continuing improvement, 1245 Industries, LLC reserves the right to change dimensions, designs, and construction from that which is shown in this brochure.

Photos of Castings

Due to continuing improvement, 1245 Industries, LLC reserves the right to change dimensions, designs, and construction from that which is shown in this brochure.

1254 Industries, LLC, 1444 Alpine Pl, San Marcos CA 92078 • VOICE 760.798.8531 • FAX 760.798.8535
sales@1254industries.com • WWW.1254INDUSTRIES.COM

SUNSET
PG 24

RANCHO
PG 24

RANCHO
PG 24

REVERE
PG 26

HARBOR
PG 26

UNITED
PG 27

UNITED
PG 27

MONTREAL
PG 28

CAPITAL
PG 28

HAMILTON
PG 29

WELLINGTION
PG 29

TUNDRA
PG 29

Due to continuing improvement, 1245 Industries, LLC reserves the right to change dimensions, designs, and construction from that which is shown in this brochure.

Photos of Castings

BROADWAY
PG 29

FLORENCE
PG 30

SPRING
PG 30

BCBOL505
PG 31

PAWN

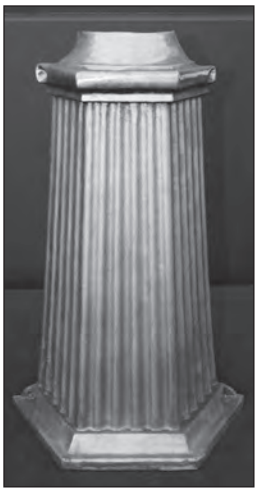

ARIZONA
PG 31

MONTREAL 168
PG 28

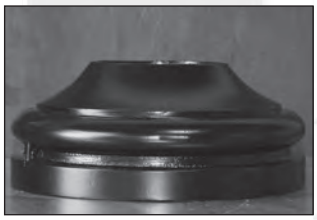

BC1-4
PG 30

ROUND REDUCER COLAR
PG 38

2-PIECE CLAMP
PG 38

Due to continuing improvement, 1245 Industries, LLC reserves the right to change dimensions, designs, and construction from that which is shown in this brochure.

1254 Industries, LLC, 1444 Alpine Pl, San Marcos CA 92078 • VOICE 760.798.8531 • FAX 760.798.8535
sales@1254industries.com • WWW.1254INDUSTRIES.COM

STERLING ARM
PG 33

VICTORIAN
PG 29

TRILOGY ARM
PG 33

DECORATIVE PLANT HANGER
PG 38

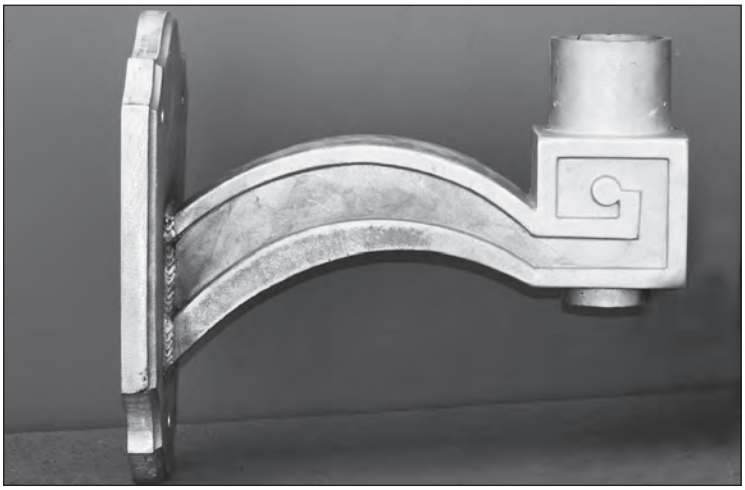

TERRACE CAST ARM
PG 33

ALHAMBRA ARM
PG 37

Due to continuing improvement, 1245 Industries, LLC reserves the right to change dimensions, designs, and construction from that which is shown in this brochure.

Photos of Castings

S SCROLL
PG 36

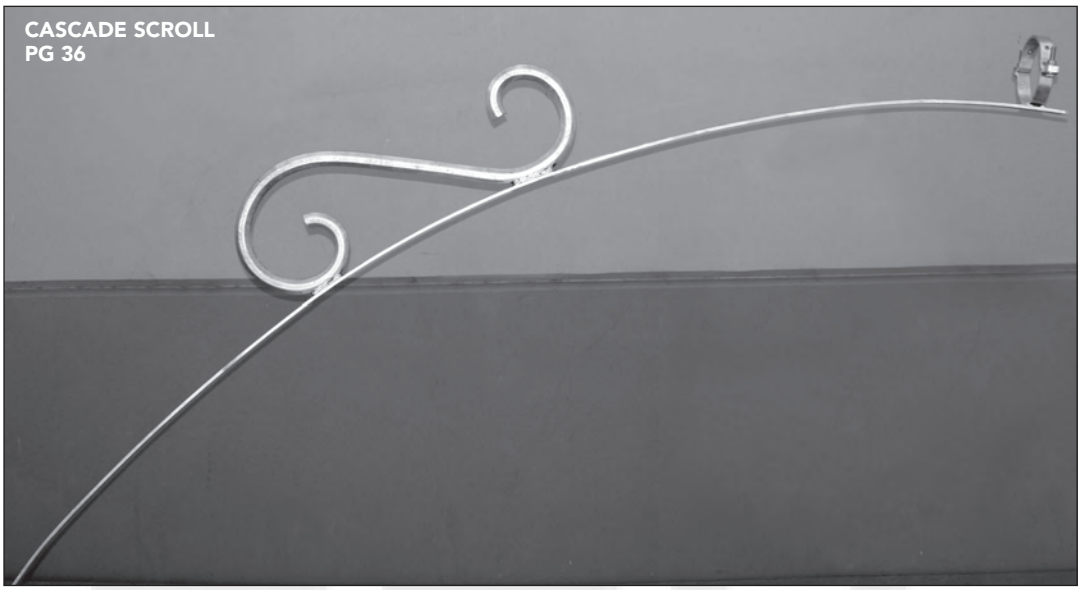

CASCADE SCROLL
PG 36

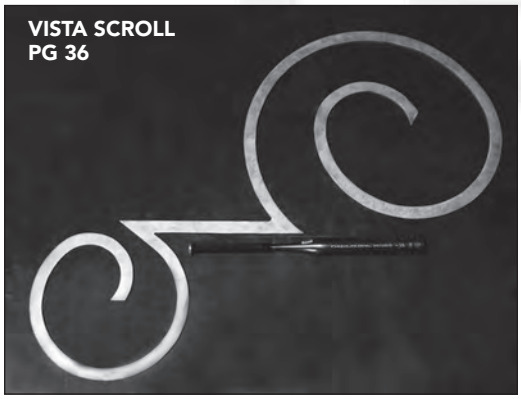

VISTA SCROLL
PG 36

SPIKE FINIAL
PG 40

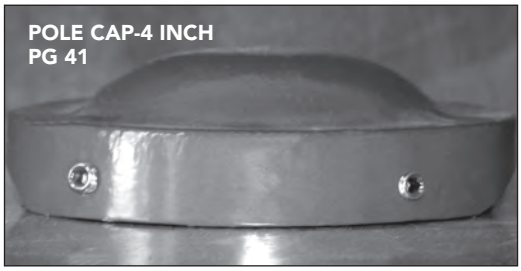

POLE CAP-4 INCH
PG 41

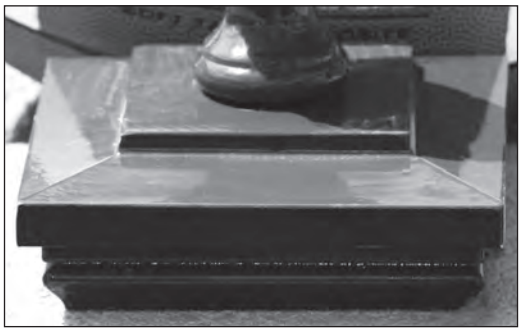

SQUARE CAP
PG 41

VISTA FINIAL SERIES
PG 40

SMALL PINEAPPLE
PG 40

LARGE
PINEAPPLE
PG 40

BREAKAWAY
COUPLING
PG 37

Due to continuing improvement, 1245 Industries, LLC reserves the right to change dimensions, designs, and construction from that which is shown in this brochure.

1254 Industries, LLC, 1444 Alpine Pl, San Marcos CA 92078 • VOICE 760.798.8531 • FAX 760.798.8535
sales@1254industries.com • WWW.1254INDUSTRIES.COM

BALL CAP
PG 40

DOME POLE CAP
PG 40

HAMMER CAP
PG 40

IRVINE FINIAL
PG 40

BALL POINT FINIAL
PG 40

POPPY FINIAL
PG 40

ALHAMBRA CAP
PG 40

RICHMOND
PG 40

TERRACE FINIAL
PG 40

UNITED FINIAL
PG 40

ACORN
PG 40

SPIKE CAP
PG 40

GOLD CAP
PG 40

FLEUR DE LIS CAP
PG 40

Due to continuing improvement, 1245 Industries, LLC reserves the right to change dimensions, designs, and construction from that which is shown in this brochure.

1254 Industries, LLC & Design, Inc.

"TERMS AND CONDITIONS"

1. **Cancellation and Alteration**
After acceptance, orders may not be cancelled or altered except by agreement between the parties. No employee of 1254 Industries, LLC (herein referenced as "1254", or the "Company") has the authority to agree to any cancellation or alteration, except in writing on 1254 forms or stationary.

2. **Delivery Dates**
1254 will insist on the customer taking delivery on schedule. If the customer postpones delivery, 1254 may make a reasonable charge to compensate for the delay in payment and a further charge for storage.

3. **Default by customer**
Customers shall have Net 30 Day payment terms with 1254, with exceptions being made for special orders. Billing will occur once an order has shipped. If the customer defaults in any of its obligations hereunder, in addition to any other rights, 1254 shall have the right to postpone delivery up to 6 weeks and to perform any of the said obligations for the customer and to charge customer therefore.

4. **Strikes and Acts of God**
If completion of the contract by 1254 is prevented or delayed in whole or in part by any strike, labor dispute, civil commotion, war, fire, flood, accident, prohibition by government authorities, act of God or other causes whether similar or dissimilar beyond the reasonable control of the company, the time for completion of the contract shall be automatically extended either for 12 months or until the operation of the said causes are ceased, whichever shall first occur, or at 1254's option, the contract or any uncompleted portion thereof may, upon the Company giving written notice therefore, be cancelled at any time while any such cause are operative, and in no event shall the Company be responsible in damages to the customer for any delay or cancellation arising in damages to the customer for any delay or cancellation arising from the aforesaid causes.

5. **Freight Allowances**
1254's freight terms are as follows: Freight Allowed for orders over $2,500.00, excluding sales tax, and shipping within the state of California. Out of State orders will be handled on a per order basis. Any order not totaling $2,500.00 shall be subject to additional freight charges. Pre-shipment of anchor bolts, template, or partial orders, will be subject to freight charges.

6. **Claim for shortages**
Because of difficulties in tracing shortages, the Company must insist that the customer give notice of any shortage within 3 days of receipt of shipping documents, in default of which, the customer shall be deemed to have waived all claims based on any shortages of products referred to in the said documents.

7. **Delivery and Unloading**
Where the order includes freight and unloading, 1254 will deliver and unload poles at the customer's stock pile, but not at separate locations unless otherwise arranged in advance. The customer will be required to supply one man to assist the driver with unloading.

8. **Law and Jurisdiction**
This contract shall be construed according to the law of California, and the courts of California shall have the exclusive jurisdiction to determine all disputes arising between the Company and the customer relating to the products referred to in this order.

9. **Installation and Shipping**
The Company will gladly offer technical advise as to the installation, handling or shipping of its products, and if requested by the customer, will supply such advice in writing. However, any such advice, if given orally, is given without responsibility and the customer expressly waives all claims in respect of such advice unless it is given in writing on Company forms or stationary.

10. **Limited Warranties**
The Company hereby warrants that its products are free of defects in workmanship or materials and that there are no deviations from the specifications written into this contract. If any such defect or deviation should appear or if any other trouble should develop involving any fault by the Company, the customer's rights shall be limited to requiring the Company either to repair or replace the item in question or to refund the price thereof, and the customer expressly waives any claims for damages for injuries or loss caused by any such defect, deviation or trouble. Except as aforesaid, the customer hereby waives all warranties and condition normally provided by law for the protection of purchasers.

11. **Representation and Assurance**
If any representations or assurances have been given to the customer by any person on behalf of the Company, they shall not be binding on the Company unless they are written into this contract.

Due to continuing improvement, 1245 Industries, LLC reserves the right to change dimensions, designs, and construction from that which is shown in this brochure.

1254 Industries, LLC, 1444 Alpine Pl, San Marcos CA 92078 • VOICE 760.798.8531 • FAX 760.798.8535
sales@1254industries.com • WWW.1254INDUSTRIES.COM

1254

Due to continuing improvement, 1245 Industries, LLC reserves the right to change dimensions, designs, and construction from that which is shown in this brochure.

1254

Due to continuing improvement, 1245 Industries, LLC reserves the right to change dimensions, designs, and construction from that which is shown in this brochure.

1254 Industries, LLC, 1444 Alpine Pl, San Marcos CA 92078 • VOICE 760.798.8531 • FAX 760.798.8535
sales@1254industries.com • WWW.1254INDUSTRIES.COM